5.67	INTERMITTENT BLOWDOWN VALVES

VALVOIND Srl Via Pascoli, 5 - 24060 Bagnatica (Bergamo) Tel. 035.681919-Fax. 035.684461

Valvoind
valvole industriali

VPA 26

INTERMITTENT BLOWDOWN VALVES
(Fabricated steel)

PN40

Da Ø 3/4" a Ø2"
Da DN20 a DN50

- **OPTIONS**
  Air filter regulator
  Solenoid valve with cycling timer.
  Mechanical limit switch
  Water powered actuator
  Stainless steel construction.
- **USE**
  Intermittent blowdown of steam boilers.
- **MODELS**
  VPA 26
- **CONNECTIONS**
  Flanged EN 1092-1 or ANSI
- **ACTUATOR**
  PA-205; PA-280.
- **ACTUATOR CONN**
  1/4" NPT-F

VALVE BODY LIMITING CONDITIONS VPA26	
ALLOWABLE PRESSURES	RELATED TEMPERATURE
40 bar	-10 /50° C
33.3 bar	200 °C
30.4 bar	250 °C
27.6 bar	300 °C

MAX. AIR WATER SUPPLY PRESS: 3,5 bar
AMBIENT TEMPERATURE: -20ºC ...+70ºC
STEM SEALING: Graphite - up to 300ºC
PLUG CHARACTERISTIC.: PL – On- Off
PORT: Full port reduced port

CE MARKING (PED - European Directive 97/23/EC)	
PN 40	Category
DN20 to DN32	SEP - art. 3, paragraph 3
DN40 to DN50	1 (CE Marked)

MATERIALS		
POS.	DESIGNATION	MATERIAL
1	Valve Body	Steel S355J2G3 / 1.0570
2	Bonnet	CF8 / 1.4308
3	* Actuator	Steel Fe410.1/St.Steel
3.1	* Spring	Spring Steel
4	* Diaphragm	NBR 70
5	Yoke	Carbon Steel/St.Steel
6	* Valve Plug	Hardened St. Steel
6.1	* Valve Seat	Hardened St. Steel
7	* Packing	Graphite
8	Valve Lever	Stainless steel / 1.4301

* Available spare parts.

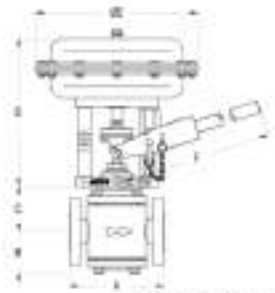

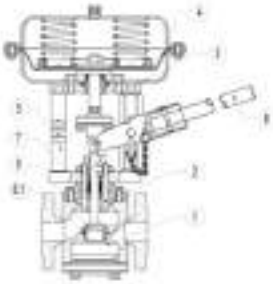

VPA26 – with pneumatic actuator and manual operation

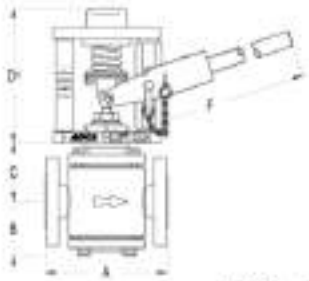

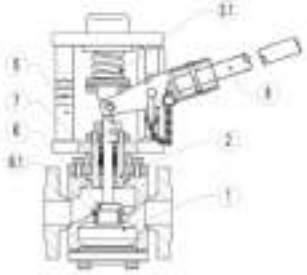

VPA26 – manual operation only

DIMENSIONS (mm) - VALVE BODY ANSI FLANGES									
DN	EN FL. A (mm)	ANSI 150 A (mm)	ANSI 300 A (mm)	B	C	D1	F	* WGT. Kgs	**WGT Kgs
20 - 3/4"	150	184	194	71	75	175	490	22	19
25 - 1"	160	184	197	71	75	175	490	22	19
32	180	/	/	75	83	175	490	26	23
40 - 11/2"	200	222	235	82	98	175	640	30	28
50 - 2"	230	254	267	97	100	175	640	40	38

DIMENSIONS - ACTUATOR			
Type	a E (mm)	D (mm)	
		DN15-100 DA/RA	DN125-200 DA
PA-205	210	235	N/A
PA-280	275	240	N/A

* Valve with pneumatic actuator ; ** Valve with manual lever only
Consult factory for certified dimensions
Some face to face dimensions are not standard,due to market trend.
Other dimensions under request.

FLOW RATE COEFFICIENTS					
DN	DN20	DN25	DN32	DN40	DN50
Kvs	6	9,4	15,4	24	30

Kvs in m3/h, see data sheet IS PV10.00 E;
For conversion Kvs = Cv(US) x 0,855

VALVE STROKE IN mm					
DN	DN20	DN25	DN32	DN40	DN50
Stroke	12	12	12	12	12

Position	Designation
1	VPA26 Blowdown Valve
2	ADCA Digital Timer plus Connector
3	ADCA Solenoid Valve 3/2
4	ADCA P10 Air Filter Regulator
5	Ball Valve
6	Limit Switch

TYPICAL INSTALLATION

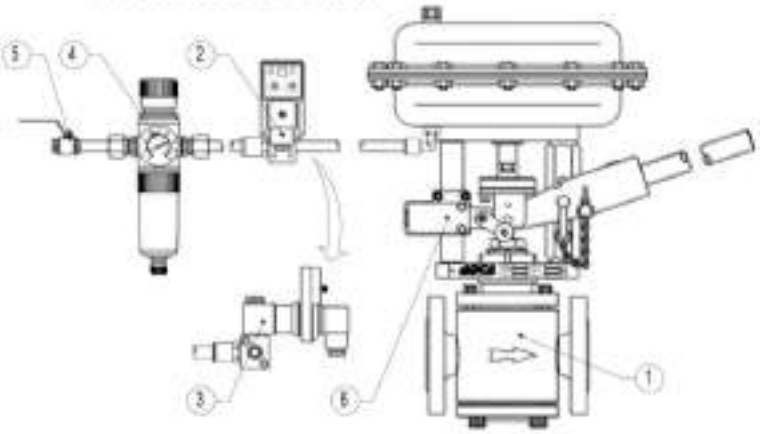

MAX. PERMISSIBLE PRESS.DROP IN bar - Normally closed valve (fluid to close) - Reverse action actuator (air signal to open)						
ACTUATOR (Pressure)	MIN. AIR PRESSURE	DN20	DN25	DN32	DN40	DN50
PA-205 (0 - 1 bar)	3,5 bar	25	25	25	25	15
PA-280 (0 - 1 bar)	3,5 bar	—	—	—	—	25

Important:
The pressure drop values are referred to closed valves.
For valve sizes DN65 and above please consult.
Special spring drops available on request.
The pressure drop values must be used within the body rating limits.

5.68	INTERMITTENT BLOWDOWN VALVES

VALVOIND Srl Via Pascoli, 5 - 24060 Bagnatica (Bergamo) Tel. 035.681919-Fax. 035.684461

VPA 26 S

INTERMITTENT BLOWDOWN VALVES
(Cast steel)

PN40

Da Ø 3/4" a Ø2"
Da DN20 a DN50

- **OPTIONS**
  Air filter regulator
  Solenoid valve with cycling timer.
  Mechanical limit switch
  Water powered actuator
  Stainless steel construction.
- **USE**
  Intermittent blowdown of steam boilers.
- **MODELS**
  VPA 26 S
- **CONNECTIONS**
  Flanged EN 1092-1
- **ACTUATOR**
  PA-205; PA-280.
- **ACTUATOR CONN**
  1/4" NPT-F

MAX. AIR WATER SUPPLY PRESS:	3,5 bar
AMBIENT TEMPERATURE:	-20ºC ...+70ºC
STEM SEALING:	Graphite - up to 400ºC
PLUG CHARACTERISTIC.:	PL – On- Off
PORT:	Full port reduced port

VALVE BODY LIMITING CONDITIONS VPA26S - PN40	
ALLOWABLE PRESSURES	RELATED TEMP.
40 bar	-10..38° C
33,7 bar	200 °C
30,4 bar	250 °C
27,6 bar	300 °C
23,8 bar	400 °C

Manual operation only

CE MARKING (PED - European Directive)	
PN 40	Category
DN20 to DN32	SEP - art. 3, paragraph 3
DN40 to DN50	1 (CE Marked)

Design with actuator and manual operation

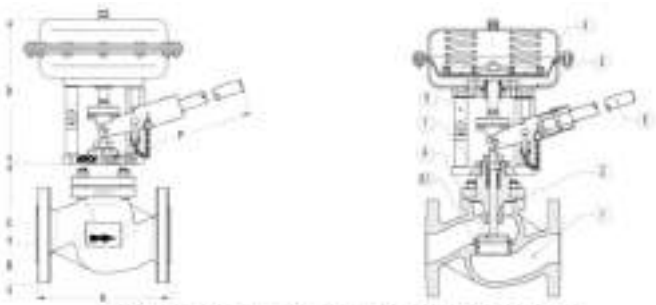

VPA26S– with pneumatic actuator and manual operation

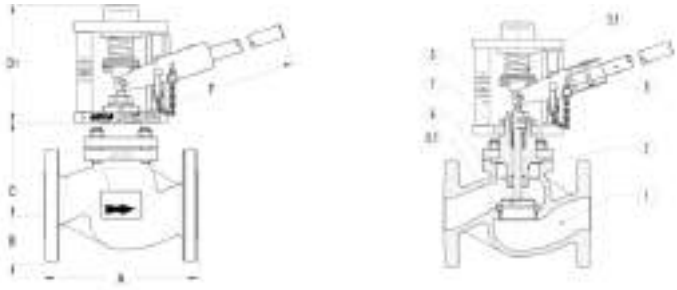

VPA26S– manual operation only

DIMENSIONS (mm) - VALVE BODY							
DN	A	B	C	D1	F	*WGT. Kg	**WGT Kg
20	150	53	80	175	380	15	12
25	160	58	85	175	380	16	13
32	180	70	90	175	380	20	17
40	200	75	95	175	650	25	22
50	230	83	105	175	650	34	31

* Valve with pneumatic actuator; ** Valve with manual lever only

FLOW RATE COEFFICIENTS						
	SIZES					
	DN15	DN20	DN25	DN32	DN40	DN50
Kvs	-	6	7,5	11	24	30

Kvs in m3/h , see data sheet IS PV10.00 E

VALVE STROKE IN mm						
	SIZES					
	DN15	DN20	DN25	DN32	DN40	DN50
Stroke	-	12	12	12	12	12

MATERIALS		
POS.	DESIGNATION	MATERIAL
1	Valve Body	A216 WCB / 1.0619
2	Bonnet	CF8 / 1.4308
3	* Actuator	Steel Fe410 1St Steel
3.1	* Spring	Spring Steel
4	* Diaphragm	NBR 70
5	Yoke	Carbon Steel/St Steel
6	* Valve Plug	Hardened St. Steel
6.1	* Valve Seat	Hardened St. Steel
7	* Packing	Graphite
8	Valve Lever	Stainless steel / 1.4301

* Available spare parts

MAX. PERMISSIBLE PRESS.DROP IN bar - Normally closed valve (Fluid to close) - Reverse action actuator (air signal to open)							
ACTUATOR (Pressure)	MIN. AIR PRESSURE	SIZES					
		DN15	DN20	DN25	DN32	DN40	DN50
PA-205 (0 - 1 bar)	3,5 bar	—	25	25	25	25	15
PA-280 (0 - 1 bar)	3,5 bar	—	—	—	—	—	25

Important:
The pressure drop values are referred to closed valves.
For valve sizes DN65 and above please consult.
Special spring drops available on request.
The pressure drop values must be used within the body rating limits.

DIMENSIONS - ACTUATOR			
Type	ø E (mm)	D (mm)	
		DN15-100 DA/RA	DN125-200 DA
PA-205	210	238	N/A
PA-280	275	240	N/A
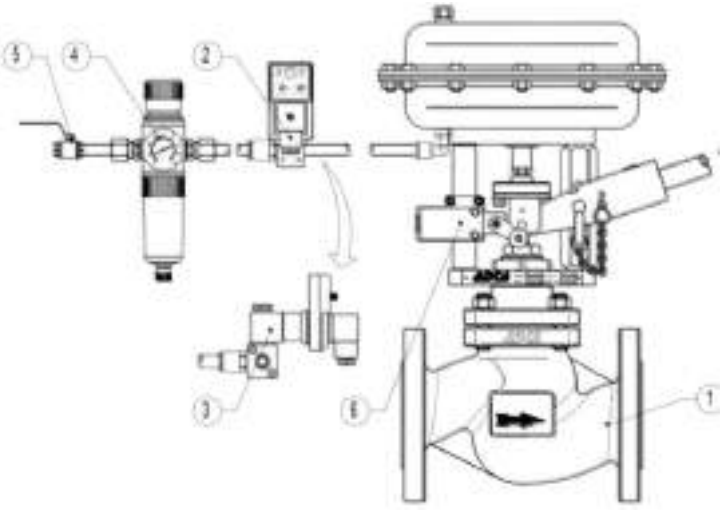
Pos.	Designation
1	VPA26S Blowdown Valve
2	ADCA Digital Timer plus Connector
3	ADCA Solenoid Valve 3/2
4	ADCA P10 Air Filter Regulator
5	Ball Valve
6	Limit Switch