5.26	PRESSURE REDUCING VALVE

VALVOIND Srl **Via Pascoli, 5 - 24060 Bagnatica (Bergamo) Tel. 035.681919-Fax. 035.684461**

Valvoind
valvole industriali

P7

DIAPHRAGM SENSING PRESSURE REDUCING VALVE

PN40

Ø 1/4" e Ø 3/8"
DN8 e DN10

- **OPTIONS**
  Outlet 1/4" gauge connection on body.
  Regulating screw with top cap.
  Internal sensing orifice
  Compressed air top for remote control
  Barstock stainless steel construction
- **USE**
  Steam, compressed air and other gases compatible with the construction.
- **MODELS**
  P7SS – Stainless steel construction
- **CONNECTIONS**
  Female screwed ISO7/1 Rp (BS21) or NPT.
- **INSTALLATION**
  Horizontal installation.
  A strainer should be provided upstream the valve.
  See IMI, installation and maintenance instructions.

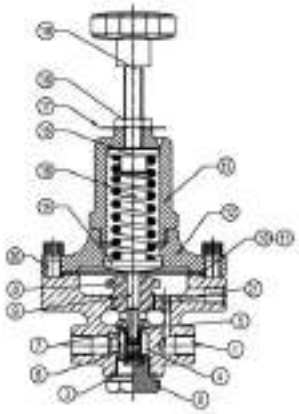

LIMITING CONDITIONS	
Valve model	**P7**
Body design conditions	PN 40
Max.upstream pressure (steam)	25 bar
Max.upstream pressure (gases)	31 bar
Max.downstream pressure	17 bar
Min.downstream pressure	0,35 bar *
Max.design temperature	300 °C

CAPACITIES		
Valve Size	1/4"	3/8"
KVs (m3/h)	1	1,1

CE MARKING (PED - European Directive 97/23/EC)	
PN 16 - PN 40	**Category**
DN 08 to 10	SEP - art. 3, paragraph3

MATERIALS PT65		
POS.	DESIGNATION	MATERIAL
1	VALVE BODY	AISI316 / 1.4401 - CF8M / 1.4408
2	PLUG	AISI316 / 1.4401
3	* GASKET	STAINLESS STEEL / GRAPHITE
4	* STRAINER SCREEN	AISI304 / 1.4301
5	GASKET	COPPER
6	* SPRING	AISI302 / 1.4310
7	* VALVE HEAD	AISI420-EPDM-PTFE etc
8	* PILOT VALVE BODY	AISI316 / 1.4401
9	*PUSHROD	AISI316 / 1.4401
10	* DIAPHRAGM	AISI301 / 1.4310
11	* GASKET	ST.ST. / GRAPHITE
12	TOP COVER	CF8 / 1.4308
13	COVER SPRING	CF8 / 1.4308
14	LOWER SPRING CARRIER	BRASS
15	TOP SPRING CARRIER	BRASS
16	* ADJUSTMENT SPRING	SPRING STEEL
17	SPRING IDENT. PLATE	ALUMINIUM
18	LOCKNUT	ST.STEEL A2-70
19	HANDWHEEL	PLASTIC
20	BOLTS	ST.STEEL A2-70
21	RESTRICTOR	ST.STEEL A2-70

* Available spare parts.
Remarks: All valves have a serial number. In case of non standard values this number must be supplied if spare parts are ordered.

DIMENSIONS (mm) Screwed											
SIZE DN	A	B	C	D	E*	F	d1**	d2***	d3***	WGT. Kgs
1/4"	80	63,5	165	120	156	31	1/8"	1/8"	1/8"	4,8
3/8"	80	63,5	165	120	156	31	1/8"	1/8"	1/8"	4,8

* Low pressure diaphragm ; ** Sensing line connection
*** Optional (pressure gauge connections) can be used also as sensing line connections

PRESSURE RANGES IN bar				
SPRING COLOUR	GREEN N°1 Diaphragm	BLUE N°1 Diaphragm	RED N°2 Diaphragms	BLACK N°2 Diaphragms
Rel. Pressure	0,07 to 0,5 bar *	0,5 to 5,5 bar **	3,5 to 8,5 bar **	7 to 17 bar **
Rel. Pressure	0,35 to 2 bar *	/	/	/

* With low pressure top; **Standard diaphragm.

P20D

DIAPHRAGM SENSING PRESSURE REDUCING VALVE

PN16 - PN63

Ø 1/4" e Ø 1/2"
DN8 e DN15

- **OPTIONS**
  Different soft valves for water and gases.
  Outlet 1/4" gauge connection on body.
  Regulating screw with top cap.
  Connection for external sensing line.
- **USE**
  Compressed air, water and other gases and liquids compatible with the construction.
- **MODELS**
  P20D – Diaphragm sensing
- **CONNECTIONS**
  Female screwed ISO7/1 Rp (BS21) or NPT.
- **INSTALLATION**
  Horizontal or vertical installation.
  A strainer should be provided upstream the valve.
  See IMI. installation and maintenance instructions.

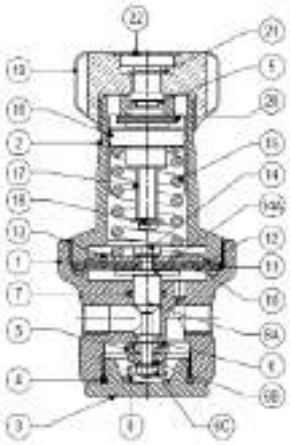

CAPACITIES			
Valve Size	*1/4"*	*3/8"*	*1/2"*
KVs (m3/h)	1,2	1,8	1,8

LIMITING CONDITIONS	
Valve model	**P20D**
Body design conditions	PN 63
Max.upstream pressure	50 bar
Max.downstream pressure	15 bar
Min.downstream pressure	0,2 bar
Max.design temperature *	80 °C
Max.recommended reducing ratio	40:1

*Other on request.

CE MARKING (PED - European Directive 97/23/EC)	
PN 16-PN63	**Category**
DN 08 to 15	SEP - art. 3, paragraph3

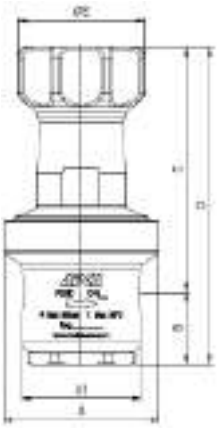

MATERIALS		
POS.	DESIGNATION	MATERIAL
1	VALVE BODY	AISI316 / 1.4401 - CF8M / 1.4408
2	TOP COVER	AISI316 / 1.4401 - CF8M / 1.4408
3	SEAT COVER	AISI316 / 1.4401 - CF8M / 1.4408
4	* O-RING	NBR
5	* PISTON VALVE	AISI316 / 1.4401
6	* VALVE HEAD	NBR-EPDM-PTFE etc
6A	PUSHROD	AISI316 / 1.4401
6B	O-RING	NBR
6C	NUT	ST.STEEL A2
7	* O-RING	NBR-EPDM-PTFE etc
8	VALVE SPRING	AISI302 / 1.4310
10	* DIAPHRAGM	PTFE
11	* DIAPHRAGM	NBR
12	GASKET	ALUMINIUM
13	SPRING PLATE	AISI304 / 1.4301
14	BOLT	ST.STEEL A2
14A	PUSHER DISC	AISI304 / 1.4301
15	* ADJUSTMENT SPRING	SPRING STEEL
16	TOP SPRING PLATE	BRASS
17	ADJUSTMENT SCREW	AISI304 / 1.4301
18	RETAINING WASHER	ST.STEEL A2
19	HANDWHEEL	ALUMINIUM PAINTED
20	BEARING	CORROSION RES. STEEL
21	EXT.BORED SHAFT RING	STAINLESS STEEL
22	COVER NUT	PLASTIC

* Available spare parts.
Remarks: All valves have a serial number. In case of non standard values this number must be supplied if spare parts are ordered.

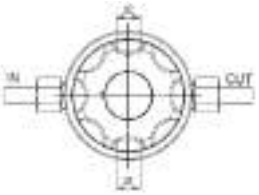

DIMENSIONS (mm) Screwed										
SIZE DN	A	A1	B	C	D	ØE	d1*	d2*	WGT. Kgs
1/4"	80	61	35,5	102,5	158	69	1/4"	1/4"	1,8
3/8"	80	61	35,5	102,5	158	69	1/4"	1/4"	1,8
1/2"	80	65	35,5	102,5	158	69	1/4"	1/4"	2,5

* Optional

5.27	PRESSURE REDUCING VALVE

VALVOIND Srl **Via Pascoli, 5 - 24060 Bagnatica (Bergamo) Tel. 035.681919-Fax. 035.684461**

Valvoind
valvole industriali

P20DS

DIAPHRAGM SENSING PRESSURE REDUCING VALVE

PN25

Da Ø 1/4" a Ø 1/2"
Da DN8 a DN15

- **OPTIONS**
  Different soft valves for water and gases.
  Outlet 1/4" gauge connection on body.
  Regulating screw with top cap.
  Connection for external sensing line
- **USE**
  Steam. compressed air and other gases and liquids compatible with the construction.
- **MODELS**
  P20DS – Stainless steel diaphragm sensing
- **CONNECTIONS**
  Female screwed ISO7/1 Rp (BS21) or NPT.
- **INSTALLATION**
  Horizontal or vertical installation.
  A strainer should be provided upstream the valve.
  See IMI, installation and maintenance instructions.

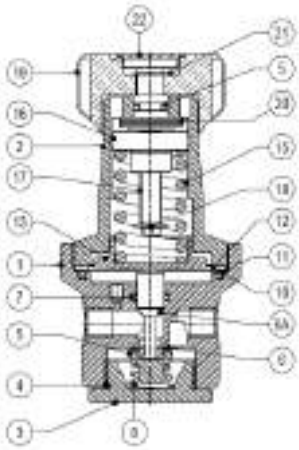

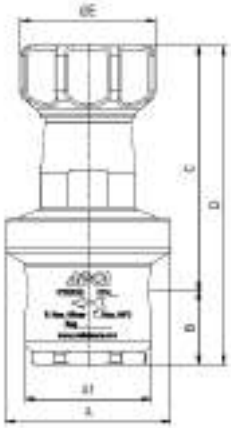

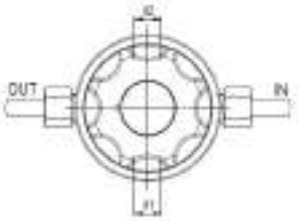

CAPACITIES			
Valve Size	*1/4"*	*3/8"*	*1/2"*
KVs (m3/h)	1,2	1,8	1,8

LIMITING CONDITIONS	
Valve model	**P20DS**
Body design conditions	PN 25
Max.upstream pressure	14 bar
Max.downstream pressure	8 bar
Min.downstream pressure	0,2 bar
Max.design temperature *	200 °C
Max.recommended reducing rato	10:1

*Other on request.

CE MARKING (PED - European Directive 97/23/EC)	
PN 25	**Category**
DN 08 to 15	SEP - art. 3, paragraph3

MATERIALS		
POS.	*DESIGNATION*	*MATERIAL*
1	VALVE BODY	AISI316 / 1.4401 , CF8M / 1.4408
2	TOP COVER	AISI316 / 1.4401 , CF8M / 1.4408
3	SEAT COVER	AISI316 / 1.4401 , CF8M / 1.4408
4	* O-RING	VITON
5	* PISTON VALVE	AISI316 / 1.4401
6	* VALVE HEAD	VITON
6A	PUSHROD	AISI316 / 1.4401
7	* O-RING	VITON
8	VALVE SPRING	AISI302 / 1.4300
10	* GASKET	COMPRESSED ARAMID FIBER
11	* DIAPHRAGM	AISI301 / 1.4410
12	GASKET	ALUMINIUM
13	SPRING PLATE	AISI304 / 1.4301
15	* ADJUSTMENT SPRING	SPRING STEEL
16	TOP SPRING PLATE	BRASS
17	ADJUSTMENT SCREW	AISI304 / 1.4301
18	RETAINING WASHER	ST STEEL A2
19	HANDWHEEL	ALUMINIUM PAINTED
20	BEARING	CORROSION RES. STEEL
21	EXT.BOWED SHAFT RING	STAINLESS STEEL
22	COVER NUT	PLASTIC

* Available spare parts.
Remarks: All valves have a serial number. In case of non-standard valves this number must be supplied if spare parts are ordered.

DIMENSIONS (mm)										
Screwed										
SIZE DN	*A*	*A1*	*B*	*C*	*D*	*ØE*	*d1**	*d2**	*WGT. Kgs*
1/4"	80	61	35,5	120,5	156	69	1/4"	1/4"	1,8
3/8"	80	61	35,5	120,5	156	69	1/4"	1/4"	1,8
1/2"	80	80	35,5	120,5	156	69	1/4"	1/4"	2,5

* Optional

P20P

PISTON SENSING PRESSURE REDUCING VALVE (Low flow)

PN320

Ø 1/4"
DN8

- **OPTIONS**
  Different soft valves for liquids and gases.
  Relieving – internal relief valve to allow reduce outlet pressure in a no-flow condition.
  Relieving – captured vent below panel
  Panel mounting ring
  Bottom mounting
  Outlet 1/4" gauge connection on body.
- **USE**
  Compressed air, water and other gases and liquids compatible with the construction.
- **MODELS**
  P20P – Stainless steel piston sensing
- **CONNECTIONS**
  Female screwed ISO7/1Rp(BS 21) or NPT.
  Special connections on request
- **INSTALLATION**
  In any position
  An upstream strainer should be provided in case of dirty fluids usage.
  See IMI, installation and maintenance instructions.

Panel mounting

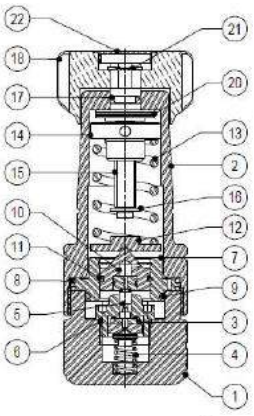

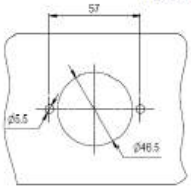

Panel cut-out

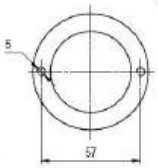

Ring

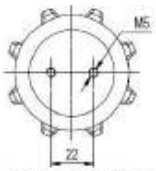

Bottom mounting

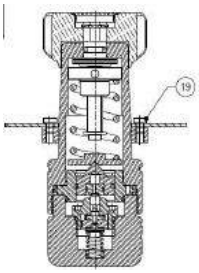

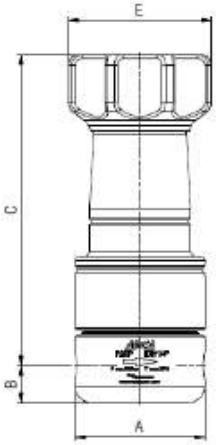

MATERIALS		
POS.	*DESIGNATION*	*MATERIAL*
1	VALVE BODY	AISI316L / 1.4404
2	TOP COVER	AISI316L / 1.4404
3	* VALVE HEAD	SINTERED PTFE etc
4	* VALVE SPRING	AISI302 / 1.4300
5	PISTON	AISI316L / 1.4404
6	* O-RING	SINTERED PTFE etc
7	PISTON SLEEVE	AISI316L / 1.4404
8	* O-RING	SINTERED PTFE etc
9	* O-RING	SINTERED PTFE etc
10	PISTON	AISI316L / 1.4404
11	* O-RING	SINTERED PTFE etc
12	SPRING PLATE	AISI316L / 1.4404
13	* ADJUSTMENT SPRING	SPRING STEEL
14	TOP SPRING PLATE	AISI316L / 1.4404
15	ADJUSTMENT SCREW	AISI316L / 1.4404
16	RETAINING WASHER	ST STEEL A2
17	* O-RING	SINTERED PTFE etc
18	HANDWHEEL	ALUMINIUM PAINTED
19	** PANEL MOUNTING RING	AISI316L / 1.4404
20	BEARING	CORROSION RES. STEEL
21	EXT.BOWED SHAFT RING	STAINLESS STEEL
22	COVER NUT	PLASTIC

* Available spare parts ** Optional
Remarks: All valves have a serial number. In case of non-standard valves this number must be supplied if spare parts are ordered.

DIMENSIONS (mm)							
Screwed							
SIZE DN	*A*	*B*	*C*	*ØE*	*d**	*d1**	*WGT. Kgs*
1/4"	59	17	143,5	69	1/8"-1/4"	1/8"-1/4"	2,5

* Optional: pressure gauge or captured vent connection.

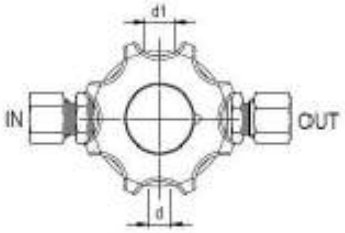

CAPACITIES			
Valve Size	*1/4"*	*1/4"*	*1/4"*
KVs (m3/h)	0,043	0,22	0,62

LIMITING CONDITIONS	
Valve model	**P20P**
Body design conditions	PN 320
Max.upstream pressure	220 bar
Max.downstream pressure	200 bar
Min.downstream pressure	0,2 bar
Max.design temperature *	80 °C
Max.recommended reducing ratio	40:1

*Other on request.

CE MARKING (PED - European Directive 97/23/EC)	
PN 320	**Category**
DN 1/4"	SEP - art. 3, paragraph3

5.28	PRESSURE REDUCING VALVE

VALVOIND Srl **Via Pascoli, 5 - 24060 Bagnatica (Bergamo) Tel. 035.681919-Fax. 035.684461**

Valvoind
valvole industriali

PRV 25/2S

PRESSURE REDUCING VALVE - DIRECT ACTING (Carbon steel)

PN25

Da Ø 1/2" a Ø 1"
Da DN15 a DN25

- **OPTIONS**
  Regulating screw with top cap.
- **USE**
  Saturated steam, compressed air and other gases compatible with the construction.
- **MODELS**
  PRV25/2S – metal to metal seating
  PRV25/2SG – soft valve
  PRW25/2S – soft valve balanced
- **CONNECTIONS**
  Female screwed ISO7/1Rp(BS 21) .
  Flanged EN 1092-1 PN40 or ANSI.
- **INSTALLATION**
  Horizontal installation.
  An "Y" strainer should be provided upstream the valve.
  See IMI, installation and maintenance instructions.

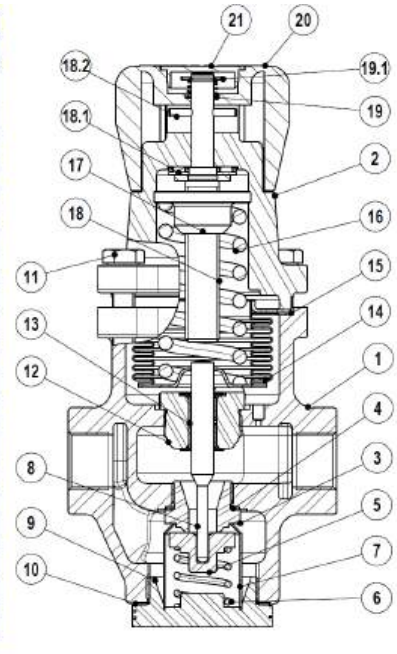

MATERIALS		
POS.	DESIGNATION	MATERIAL
1	VALVE BODY	A216WCB / 1.0619 or P250GH / 1.0460
2	COVER	A216WCB / 1.0619
3	*SEAT	AISI 316 / 1.4401
4	*GASKET	COPPER
5	*VALVE	HARDENED ST.STEEL
5.1	*O-RING	NBR
5.2	*VALVE HEAD	NBR
5.3	*VALVE HEAD	PTFE/GRAPHITE
6	*VALVE RETURN SPRING	AISI 302 / 1.4300
7	*STRAINER SCREEN	AISI 304 / 1.4301
8	PUSHROD	AISI 316 / 1.4401
9	BOTTOM CAP	CF8M / 1.4408
10	*CAP GASKET	ST.ST./ GRAPHITE
11	COVER BOLTS	STEEL 8.8
12	*GUIDE BUSH	AISI 316 / 1.4401
13	* PLAIN BEARING	BRONZE FILLED PTFE
14	*BELLOWS	AISI 316 TI / 1.4571
15	*BELLOWS GASKET	ST.ST./ GRAPHITE
16	*ADJUSTMENT SPRING	STEEL
17	TOP SPRING PLATE	BRASS
18	ADJUSTMENT SCREW	AISI 304 / 1.4301
18.1	BEARING	STEEL
18.2	PIN	AISI 304 / 1.4301
19	SPRING	AISI 302 / 1.4300
19.1	STARLOCK WASHER	AISI 302 / 1.4300
20	HANDWHEEL	PLASTIC
21	SPRING IDENT.PLATE	PLASTIC

* Available spare parts.

CE MARKING (PED) - European Directive 97/23/EC)	
PN 25	Category
DN 15 to 25	SEP - art. 3, paragraph3

CAPACITIES (See selection table)			
Valve Size	*15*	*20*	*25*
KVs	1,7	2,6	3,1

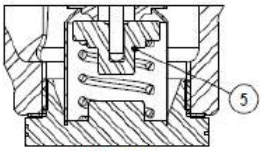

PRV25/2S

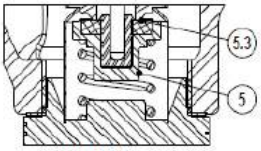

PRV25/2SG

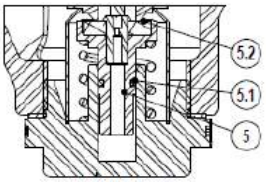

PRW25/2S

LIMITING CONDITIONS			
	PRV25/2S	PRV25/2SG	PRW25/2S
Body design conditions	PN25	PN25	PN25
Max.upstream pressure	17 bar	17 bar	14 bar
Max.downstream pressure	8,6 bar	8,6 bar	8,6 bar
Min.downstream pressure	0,14 bar	0,14 bar	0,35 bar
Max.design temperature	210ºC	180ºC	75ºC
Max.cold hydraulic test	38 bar	38 bar	38 bar
Max.reducing ratio	10:1	10:1	10:1

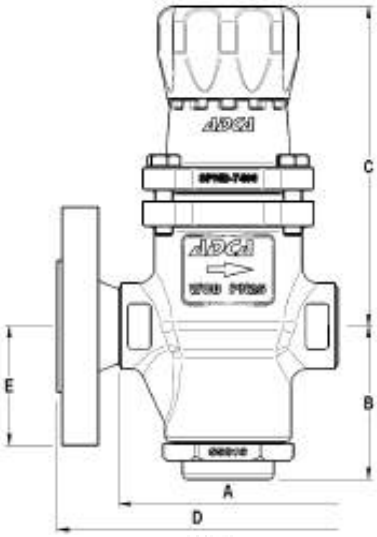

PRESSURE RANGES				
Spring colour	*Blue **	*Yellow ***	*Green*	*Red*
Red.Press. bar	**0,35 - 1,7**	**0,14 - 1,7**	**1,4 - 4,0**	**3,5 - 8,6**

*Applicable only on the PRW ; ** Appl.only on the PRV
Where control spring ranges overlap,always use the lower range to give better control and precision.

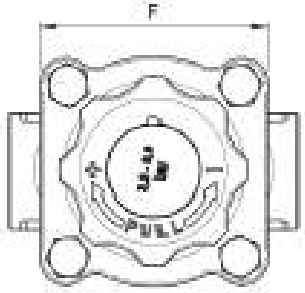

DIMENSIONS (mm)-Screwed						EN1092-1 Flanges		
SIZE DN	*A*	*B*	*C*	*F*	*WGT. Kgs*	*D*	*E*	*WGT. Kgs*
1/2"	96	68,5	141	74	3	150	47,5	4,4
3/4"	96	68,5	141	74	3	150	52,5	5
1"	96	68,5	141	74	2,9	160	57,5	5,5

5.29	PRESSURE REDUCING VALVE

VALVOIND Srl **Via Pascoli, 5 - 24060 Bagnatica (Bergamo) Tel. 035.681919-Fax. 035.684461**

Valvoind
valvole industriali

PRV 25I

PRESSURE REDUCING VALVE - DIRECT ACTING
Stainless steel (CF8M)

PN25

Ø 1/2" - 3/4" - 1"
DN15 – DN20 – DN25

- **OPTIONS**
  Regulating screw with top cap.
- **USE**
  Saturated steam, compressed air and other gases compatible with the construction.
- **MODELS**
  PRV25 I – metal to metal seating
  PRV25IG – soft valve
  PRW25I – soft valve balanced
- **CONNECTIONS**
  Female screwed ISO7/1Rp(BS 21) .
  Flanged EN 1092-1 PN40 or ANSI.
- **INSTALLATION**
  Horizontal installation.
  An "Y" strainer should be provided upstream the valve.
  See IMI, installation and maintenance instructions.

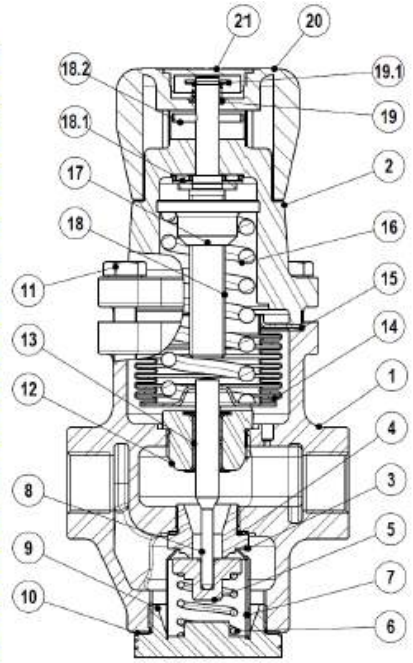

MATERIALS		
POS.	DESIGNATION	MATERIAL
1	VALVE BODY	CF8M / 1.4408
2	COVER	CF8M / 1.4408
3	*SEAT	AISI 316 / 1.4401
4	*GASKET	COPPER
5	*VALVE	HARDENED ST.STEEL
5.1	*O-RING	NBR
5.2	*VALVE HEAD	NBR
5.3	*VALVE HEAD	PTFE/GRAPHITE
6	*VALVE RETURN SPRING	AISI 302 / 1.4300
7	*STRAINER SCREEN	AISI 304 / 1.4301
8	PUSHROD	AISI 316 / 1.4401
9	BOTTOM CAP	CF8M / 1.4408
10	*CAP GASKET	ST.ST./ GRAPHITE
11	COVER BOLTS	STAINLESS STEEL
12	*GUIDE BUSH	AISI 316 / 1.4401
13	* PLAIN BEARING	BRONZE FILLED PTFE
14	*BELLOWS	AISI 316 TI / 1.4571
15	*BELLOWS GASKET	ST.ST./ GRAPHITE
16	*ADJUSTMENT SPRING	STEEL
17	TOP SPRING PLATE	BRASS
18	ADJUSTMENT SCREW	AISI 304 / 1.4301
18.1	BEARING	STEEL
18.2	PIN	AISI 304 / 1.4301
19	SPRING	AISI 302 / 1.4300
19.1	STARLOCK WASHER	AISI 302 / 1.4300
20	HANDWHEEL	PLASTIC
21	SPRING IDENT.PLATE	PLASTIC

* Available spare parts.

CE MARKING (PED - European Directive 97/23/EC)	
PN 25	Category
DN 15 to 25	SEP - art. 3, paragraph3

CAPACITIES (See selection table)			
Valve Size	*15*	*20*	*25*
KVs	1,7	2,6	3,1

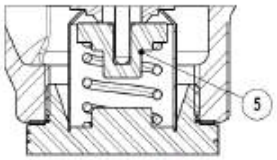

PRV25I

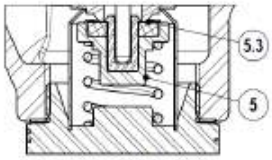

PRV25IG

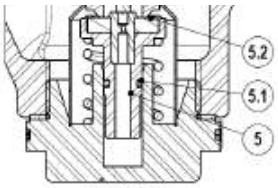

PRW25I

LIMITING CONDITIONS			
	PRV25I	PRV25IG	PRW25I
Body design conditions	PN25	PN25	PN25
Max.upstream pressure	17 bar	17 bar	14 bar
Max.downstream pressure	8,6 bar	8,6 bar	8,6 bar
Min.downstream pressure	0,14 bar	0,14 bar	0,35 bar
Max.design temperature	210°C	180°C	75°C
Max.cold hydraulic test	38 bar	38 bar	38 bar
Max.reducing ratio	10:1	10:1	10:1

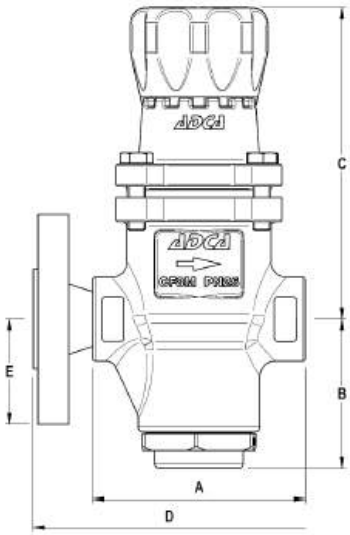

PRESSURE RANGES				
Spring colour	*Blue **	*Yellow ***	*Green*	*Red*
Red.Press. bar	**0,35 - 1,7**	**0,14 - 1,7**	**1,4 - 4,0**	**3,5 - 8,6**

*Applicable only on the PRW ; ** Appl.only on the PRV
Where control spring ranges overlap,always use the lower range to give better control and precision.

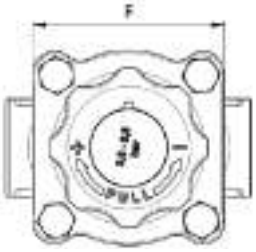

DIMENSIONS (mm)-Screwed						EN1092-1 Flanges		
SIZE DN	*A*	*B*	*C*	*F*	*WGT. Kgs*	*D*	*E*	*WGT. Kgs*
1/2"	96	68,5	141	74	3	150	47,5	4,4
3/4"	96	68,5	141	74	3	150	52,5	5
1"	96	68,5	141	74	2,9	160	57,5	5,5

5.30	PRESSURE REDUCING VALVE

VALVOIND Srl **Via Pascoli, 5 - 24060 Bagnatica (Bergamo) Tel. 035.681919-Fax. 035.684461**

Valvoind
valvole industriali

PRV 30SS

DIAPHRAGM SENSING PRESSURE REDUCING VALVE

PN16 – PN63

Ø 1/2" e Ø 3/4"
DN15 e DN20

- **OPTIONS**
  Different soft valves for water and gases.
  Relieving-Internal relief valve to allow reduce outlet pressure in a no-flow condition.
  Built-in strainer.
  Outlet 1/4" gauge connection on body.
  Regulating screw with top cap.
- **USE**
  Compressed air, water and other gases and liquids compatible with the construction.
- **MODELS**
  PRV30/SS – Stainless steel.
- **CONNECTIONS**
  Female screwed ISO7/1Rp(BS 21) or NPT.
  Flanged EN 1092-1 PN40-PN63.
  Special flanges upon request.
- **INSTALLATION**
  Horizontal installation.
  An "Y" strainer should be provided upstream the valve.
  See IMI, installation and maintenance instructions.

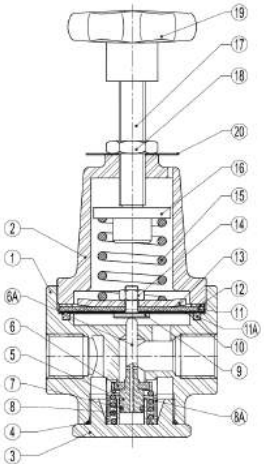

MATERIALS		
POS.	DESIGNATION	MATERIAL
1	VALVE BODY (a)	CF8M / 1.4408 (AISI316 / 1.4401)
2	TOP COVER (a)	CF8M / 1.4408 (AISI316 / 1.4401)
3	SEAT COVER (a)	CF8M / 1.4408 (AISI316 / 1.4401)
4	* O-RING	NBR
5	* PISTON VALVE	AISI316 / 1.4401
6	* VALVE HEAD	NBR-EPDM-PTFE,etc
6A	PUSHROD	AISI316 / 1.4401
7	* O-RING	NBR-EPDM-PTFE,etc
8	* VALVE SPRING	AISI302 / 1.4300
8A	* STRAINER SCREEN	AISI304 / 1.4301
9	PUSHER DISC	AISI304 / 1.4301
10	* DIAPHRAGM	PTFE
11	* DIAPHRAGM	** NBR
11A	*O-RING	NBR-EPDM-PTFE,etc
12	GASKET	** ALUMINIUM
13	SPRING PLATE	AISI304 / 1.4301
14	NUT	ST.STEEL A2-70
15	* ADJUSTMENT SPRING	SPRING STEEL
16	TOP SPRING PLATE	BRASS
17	ADJUSTMENT SCREW	AISI304 / 1.4301
18	LOCKNUT	ST.STEEL A2-70
19	HANDWHEEL	PLASTIC
20	SPRING IDENT. PLATE	ALUMINIUM

* Available spare parts. ** Stainless steel on request.
Remarks: All valves have a serial number. In case of non-standard valves this number must be supplied if spare parts are ordered.
a) Barstock execution on request

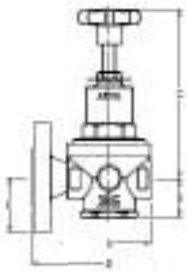

CAPACITIES		
Valve Size	15	20
KVs (m3/h)	2,1	2,4

CE MARKING (PED - European Directive 97/23/EC)	
PN16-PN63	Category
DN 15 to 20	SEP - art. 3, paragraph3

DIMENSIONS (mm)										
Screwed					EN 1092-1 Flg.PN16/PN40			EN 1092-1 Flg.PN63/PN100		
SIZE DN	A	B	C	WGT. Kgs	D*	E	WGT. Kgs	D*	E	WGT. Kgs
1/2"-15	80	38	175	1,6	150	47,5	3,2	210	52,5	4
3/4"-20	80	38	175	1,6	150	52,5	3,8	230	70	6

* Different lenghts and connections on request.
Note: DN15 PN16/40 face to face dim. was adopted as per DN20
a) 1"

LIMITING CONDITIONS	
Valve model	PRV30SS
Body design conditions	PN 63
Max upstream pressure	50 bar
Max downstream pressure	15 bar
Min downstream pressure	0,2 bar
Max design temperature *	80 °C
Max recommended reducing ratio	40:1

*Other on request.

PRV 30SS

DIAPHRAGM SENSING PRESSURE REDUCING VALVE

PN16 – PN63

Ø 1" e Ø 1 1/4"
DN25 e DN32

- **OPTIONS**
  Different soft valves for water and gases.
  Relieving-Internal relief valve to allow reduce outlet pressure in a no-flow condition.
  Outlet 1/4" gauge connection on body.
  Regulating screw with top cap.
- **USE**
  Compressed air, water and other gases and liquids compatible with the construction.
- **MODELS**
  PRV30/SS – Stainless steel.
- **CONNECTIONS**
  Female screwed ISO7/1Rp(BS 21) or NPT.
  Flanged EN 1092-1 PN40-PN63.
  Special flanges upon request.
- **INSTALLATION**
  Horizontal installation.
  An "Y" strainer should be provided upstream the valve.
  See IMI, installation and maintenance instructions.

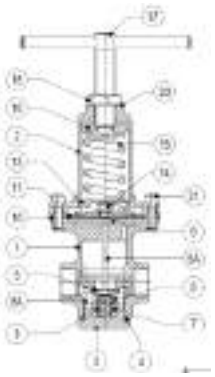

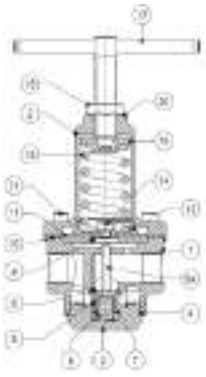

MATERIALS		
POS.	DESIGNATION	MATERIAL
1	VALVE BODY	AISI316 / 1.4401 ; CF8M / 1.4408
2	TOP COVER	CF8M / 1.4408
3	SEAT COVER	AISI316 / 1.4401
4	* O-RING	NBR
5	* PISTON VALVE	AISI316 / 1.4401
6	* VALVE HEAD	NBR-EPDM-PTFE,etc
6A	PUSHROD	AISI316 / 1.4401
7	* O-RING	NBR-EPDM-PTFE,etc
8	* VALVE SPRING	AISI302 / 1.4300
8A	* STRAINER SCREEN	AISI304 / 1.4301
9	PUSHER DISC	AISI304 / 1.4301
10	* DIAPHRAGM	PTFE
11	* DIAPHRAGM	**NBR
13	SPRING PLATE	AISI304 / 1.4301
14	NUT	ST.STEEL A2-70
15	* ADJUSTMENT SPRING	SPRING STEEL
16	TOP SPRING PLATE	BRASS
17	ADJUSTMENT SCREW	AISI304 / 1.4301
18	LOCKNUT	ST.STEEL A2-70
20	SPRING IDENT. PLATE	ALUMINIUM
21	BOLTS	ST.STEEL A2-70

* Available spare parts. ** Stainless steel on request
Remarks: All valves have a serial number. In case of non-standard valves this number must be supplied if spare parts are ordered.

CAPACITIES		
Valve Size	25	32
KVs (m3/h)	6,5	7,2

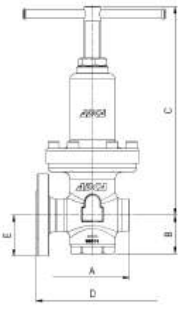

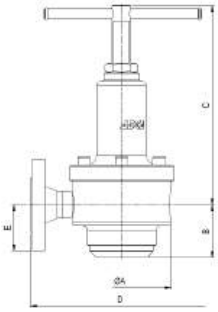

DIMENSIONS (mm) - CASTED VERSION							
Screwed					Flg. PN16/40		
SIZE DN	A	B	C	WGT. Kgs	D*	E	WGT. Kgs
1"-25	105	60	295	6,3	160	57,5	8,5

* Different lenghts on request.

LIMITING CONDITIONS	
Valve model	PRV30SS
Body design conditions	PN 63
Max upstream pressure	50 bar
Max downstream pressure	15 bar
Min downstream pressure	0,2 bar
Max design temperature *	80 °C
Max recommended reducing ratio	40:1

*Other on request.

CE MARKING (PED - European Directive 97/23/EC)	
PN 16 - PN 63	Category
DN 25 to 32	SEP - art. 3, paragraph3

DIMENSIONS (mm) - BARSTOCK VERSION																	
Screwed					Flg. PN16/40			Flg. PN63/100			ANSI 150 lbs			ANSI 300 lbs			
NOM DN	A	B	C	Kg	D*	E	Kg	D*	E	Kg	D*	E	Kg	D*	E	Kg	
1"-25	125	68	280	7,5	200	68	11	230	78	13	230	68	16,5	230	82	19,5	
1"1/4"-32	125	68	280	7,5	200	78	11	260	78	14	260	84	11	260	87	12	

* Different lenghts on request.

5.31	PRESSURE REDUCING VALVE

VALVOIND Srl **Via Pascoli, 5 - 24060 Bagnatica (Bergamo) Tel. 035.681919-Fax. 035.684461**

Valvoind
valvole industriali

PRV 30SS

DIAPHRAGM SENSING PRESSURE REDUCING VALVE

PN63

Ø 1 1/2" - Ø 2"
DN40 – DN50

- **OPTIONS**
  Different soft valves for water and gases.
  Relieving-Internal relief valve to allow reduce outlet pressure in a no-flow condition.
  Built-in strainer.
  Outlet 1/4" gauge connection on body.
  Regulating screw with top cap.
- **USE**
  Compressed air, water and other gases and liquids compatible with the construction.
- **MODELS**
  PRV30/SS – Stainless steel.
- **CONNECTIONS**
  Female screwed ISO7/1Rp(BS 21) or NPT.
  DN40-Flanged EN1092-1 Type11 B PN 40-63
  DN50-Flanged EN1092-1 Type01 A PN 40 *
  DN50-Flanged EN1092-1 Type11 B PN 63
  *Type 11 B PN40 welding neck available, with different face to face dimension.
- **INSTALLATION**
  Horizontal installation.
  An "Y" strainer should be provided upstream the valve.
  See IMI, installation and maintenance instructions.

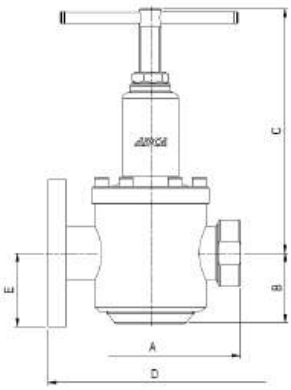

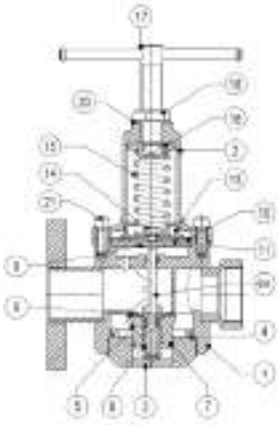

MATERIALS		
POS.	DESIGNATION	MATERIAL
1	VALVE BODY	AISI316 / 1.4401
2	TOP COVER	CF8M / 1.4408
3	SEAT COVER	AISI316 / 1.4401
4	* O-RING	NBR
5	* PISTON VALVE	AISI316 / 1.4401
6	* VALVE HEAD	NBR-EPDM-PTFE etc
6A	PUSHROD	AISI316 / 1.4401
7	* O-RING	NBR-EPDM-PTFE etc
8	* VALVE SPRING	AISI302 / 1.4308
9	PUSHER DISC	AISI304 / 1.4301
10	* DIAPHRAGM	PTFE
11	* DIAPHRAGM	NBR
12	SPRING PLATE	AISI304 / 1.4301
13	NUT	ST.STEEL A2-70
13	* ADJUSTMENT SPRING	SPRING STEEL
13	TOP SPRING PLATE	BRASS
17	ADJUSTMENT SCREW	AISI304 / 1.4301
18	LOCKNUT	ST.STEEL A2-70
20	SPRING CONT. PLATE	ALUMINIUM
21	BOLTS	ST.STEEL A2-70

* Available spare parts. ** Stainless steel on request.
Remark: All valves have a serial number. In case of non-standard valves this number must be supplied if spare parts are ordered.

LIMITING CONDITIONS	
Valve model	PRV30SS
Body design conditions	PN 63
Max.upstream pressure	50 bar
Max.downstream pressure	15 bar
Min.downstream pressure	0,2 bar
Max.design temperature *	80 °C
Max.recommended reducing ratio	40:1

*Other on request.

DIMENSIONS (mm)																	
Screwed					Flg.PN16/40			Flg.PN63/100				ANSI 150 lbs			ANSI 150 lbs		
SIZE DN	A	B	C	WGT. Kgs	D*	E	WGT. Kgs	D*	E PN63	E PN100	WGT. Kgs	D*	E	WGT. Kgs	D*	E	WGT. Kgs
11/2"-40	205	86	268	13	201	75	16,3	260	85	85	20,3	235	63,5	15,5	248	78	18
2"-50	201	80	274	13,3	** 230	82,5	18,5	300	90	97,5	22,8	254	76	18	267	82,5	20

* Different lenghts and ANSI flanges available on request.
** Only available with flat flanges EN 1092-1 Type01 A. Welding neck Type11 B flanges as option with 300mm minimum face to face dimensions.

CE MARKING (PED - European Directive 97/23/EC)	
PN 63	Category
DN 40-50	1 (CE Marked)

CAPACITIES		
Valve Size	40	50
KVs (m3/h)	12,7	13,7

PRV 31SS

DIAPHRAGM SENSING PRESSURE REDUCING VALVE

PN63

Ø 1/2" - Ø 3/4"
DN15 – DN20

- **OPTIONS**
  Different soft valves for water and gases.
  Relieving-Internal relief valve to allow reduce outlet pressure in a no-flow condition.
  Built-in strainer.
  Outlet 1/4" gauge connection on body.
  Regulating screw with top cap.
- **USE**
  Compressed air, water and other gases and liquids compatible with the construction.
- **MODELS**
  PRV31/SS – Stainless steel.
- **CONNECTIONS**
  Female screwed ISO7/1Rp(BS 21) or NPT.
  Flanged EN 1092-1 PN40 – PN63.
  Special flanges upon request.
- **INSTALLATION**
  Horizontal installation.
  An "Y" strainer should be provided upstream the valve.
  See IMI, installation and maintenance instructions.

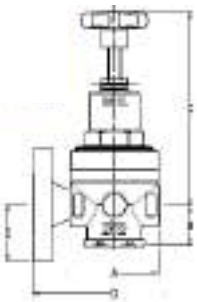

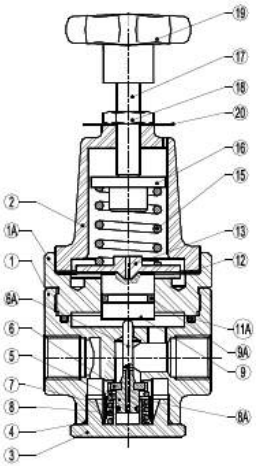

MATERIALS		
POS.	DESIGNATION	MATERIAL
1	VALVE BODY (a)	CF8M / 1.4408 (AISI316 / 1.4401)
1A	PISTON SLEEVE	AISI316 / 1.4401
2	TOP COVER (a)	CF8M / 1.4408 (AISI316 / 1.4401)
3	SEAT COVER (a)	CF8M / 1.4408 (AISI316 / 1.4401)
4	* O-RING	NBR
5	* PISTON VALVE	AISI316 / 1.4401
6	* VALVE HEAD	NBR-EPDM-PTFE etc
6A	PUSHROD	AISI316 / 1.4401
7	* O-RING	NBR-EPDM-PTFE etc
8	* VALVE SPRING	AISI302 / 1.4308
8A	STRAINER SCREEN	AISI304 / 1.4301
9	PISTON	AISI316 / 1.4401
9A	* O-RING	NBR-EPDM-PTFE etc
11A	O-RING	NBR-EPDM-PTFE etc
11	GASKET	ALUMINIUM
11	SPRING PLATE	AISI304 / 1.4301
11	* ADJUSTMENT SPRING	SPRING STEEL
11	TOP SPRING PLATE	BRASS
11	ADJUSTMENT SCREW	AISI304 / 1.4301
14	LOCKNUT	ST.STEEL A2-70
15	HANDWHEEL	PLASTIC
16	SPRING CONT. PLATE	ALUMINIUM

* Available spare parts.
Remark: All valves have a serial number. In case of non-standard valves this number must be supplied if spare parts are ordered as Bardach execution on request.

CAPACITIES		
Valve Size	15	20
KVs (m3/h)	3	3,5

LIMITING CONDITIONS	
Valve model	PRV31SS
Body design conditions	PN 63
Max.upstream pressure	50 bar
Max.downstream pressure	50 bar
Min.downstream pressure	3 bar
Max.design temperature *	80 °C
Max.recommended reducing ratio	40:1

*Other on request.

DIMENSIONS (mm)										
Screwed					EN 1092-1 Flg.PN16/40			EN 1092-1 Flg.PN63/100		
SIZE DN	A	B	C	WGT. Kgs	D*	E	WGT. Kgs	D*	E	WGT. Kgs
1/2"-15	80	38	175	2,6	150	47,5	4	210	52,5	4,9
3/4"-20	80	38	175	2,6	150	52,5	4,7	230	70	6,9

* Different lenghts on request.
Note: DN15 PN16/40 face to face dim. was adopted as per DN20

CE MARKING (PED - European Directive 97/23/EC)	
PN 16 - PN 63	Category
DN 15 to 20	SEP - art. 3, paragraph3

5.32	PRESSURE REDUCING VALVE

VALVOIND Srl **Via Pascoli, 5 - 24060 Bagnatica (Bergamo) Tel. 035.681919-Fax. 035.684461**

Valvoind
valvole industriali

PRV 31SS

PISTON SENSING PRESSURE REDUCING VALVE

PN16 - PN63

Ø 1" - Ø 1 1/4"
DN25 – DN32

- **OPTIONS**
  Different soft valves for water and gases.
  Relieving-Internal relief valve to allow reduce outlet pressure in a no-flow condition.
  Outlet 1/4" gauge connection on body.
  Regulating screw with top cap.
- **USE**
  Compressed air, water and other gases and liquids compatible with the construction.
- **MODELS**
  PRV31/SS – Stainless steel.
- **CONNECTIONS**
  Female screwed ISO7/1Rp(BS 21) or NPT.
  Flanged EN 1092-1 PN40 – PN63.
  Special flanges upon request.
- **INSTALLATION**
  Horizontal installation.
  An "Y" strainer should be provided upstream the valve.
  See IMI, installation and maintenance instructions.

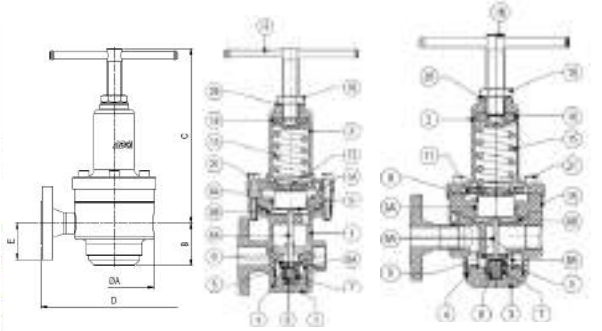

DIMENSIONS (mm) - CASTED VERSION							
Screwed					Flg.PN16/40		
SIZE DN	A	B	C	WGT. Kgs	D*	E	WGT. Kgs
1"-25	105	60	320	8,6	160	57,5	10,7

* Different lenghts on request.

MATERIALS		
POS.	DESIGNATION	MATERIAL
1	VALVE BODY	AISI316 / 1.4401 - CF8M / 1.4408
1A	PISTON SLEEVE	AISI316 / 1.4401
2	TOP COVER	CF8M / 1.4408
3	SEAT COVER	AISI316 / 1.4401
4	* O-RING	NBR
5	* PISTON VALVE	AISI316 / 1.4401
6	* VALVE HEAD	NBR-EPDM-PTFE,etc
6A	PUSHROD	AISI316 / 1.4401
7	* O-RING	NBR-EPDM-PTFE,etc
8	* VALVE SPRING	AISI302 / 1.4300
8A	* ADJUSTMENT SCREW	AISI304 / 1.4301
9	PISTON	AISI316 / 1.4401
9A	* O-RING	NBR-EPDM-PTFE,etc
9B	*O-RING	NBR-EPDM-PTFE,etc
13	SPRING PLATE	AISI304 / 1.4301
15	* ADJUSTMENT SPRING	SPRING STEEL
16	TOP SPRING PLATE	BRASS
17	ADJUSTMENT SCREW	AISI304 / 1.4301
18	LOCKNUT	ST.STEEL A2-70
20	SPRING IDENT. PLATE	ALUMINIUM
21	BOLTS	STAINLESS ST. A2-70

* Available spare parts.
Remarks: All valves have a serial number. In case of non-standard valves this number must be supplied if spare parts are ordered.

LIMITING CONDITIONS	
Valve model	PRV31SS
Body design conditions	PN 63
Max.upstream pressure	50 bar
Max.downstream pressure	50 bar
Min.downstream pressure	3 bar
Max.design temperature *	80 °C
Max.recommended reducing ratio	40:1

*Other on request.

CAPACITIES		
Valve Size	25	32
KVs (m3/h)	7,5	8,2

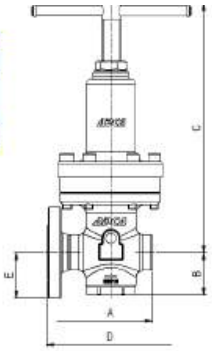

DIMENSIONS (mm) - BARSTOCK VERSION																
Screwed					Flg.PN16/40			Flg.PN63/100			ANSI 150 lbs			ANSI 300 lbs		
SIZE DN	A	B	C	Kg	D*	E	Kg	D*	E	Kg	D*	E	Kg	D*	E	Kg
1"-25	125	66	275	9,7	230	58	12	230	70	15	230	54	14	230	62	17
11/4"-32	125	66	275	9,7	260	70	14	260	78	17	260	59	15	260	67	18

* Different lenghts on request.

CE MARKING (PED - European Directive 97/23/EC)	
PN 16 - PN 63	Category
DN 25 to 32	SEP - art. 3, paragraph3

PRV 31SS

PISTON SENSING PRESSURE REDUCING VALVE

PN63

Ø 1 1/2" - Ø 2"
DN40 – DN50

- **OPTIONS**
  Different soft valves for water and gases.
  Relieving-Internal relief valve to allow reduce outlet pressure in a no-flow condition.
  Built-in strainer.
  Outlet 1/4" gauge connection on body.
  Regulating screw with top cap.
- **USE**
  Compressed air, water and other gases and liquids compatible with the construction.
- **MODELS**
  PRV30/SS – Stainless steel.
- **CONNECTIONS**
  Female screwed ISO7/1Rp(BS 21) or NPT.
  DN40-Flanged EN1092-1 Type11 B PN 40-63
  DN50-Flanged EN1092-1 Type01 A PN 40 *
  DN50-Flanged EN1092-1 Type11 B PN 63
  *Type 11 B PN40 welding neck available, with different face to face dimension.
- **INSTALLATION**
  Horizontal installation.
  An "Y" strainer should be provided upstream the valve.
  See IMI, installation and maintenance instructions.

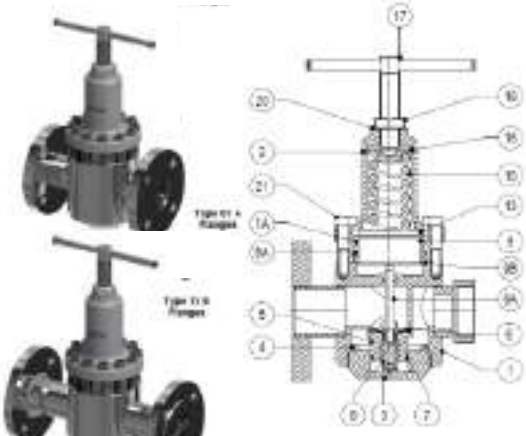

MATERIALS		
POS.	DESIGNATION	MATERIAL
1	VALVE BODY	AISI316 / 1.4401
1A	PISTON SLEEVE	AISI316 / 1.4401
2	TOP COVER	CF8M / 1.4408
3	SEAT COVER	AISI316 / 1.4401
4	* O-RING	NBR
5	* PISTON VALVE	AISI316 / 1.4401
6	* VALVE HEAD	NBR-EPDM-PTFE,etc
6A	PUSHROD	AISI316 / 1.4401
7	* O-RING	NBR-EPDM-PTFE,etc
8	* VALVE SPRING	AISI302 / 1.4300
9	PISTON	AISI316 / 1.4401
9A	* O-RING	NBR-EPDM-PTFE,etc
9B	*O-RING	NBR-EPDM-PTFE,etc
13	SPRING PLATE	AISI304 / 1.4301
15	* ADJUSTMENT SPRING	SPRING STEEL
16	TOP SPRING PLATE	BRASS
17	ADJUSTMENT SCREW	AISI304 / 1.4301
18	LOCKNUT	ST.STEEL A2-70
20	SPRING IDENT. PLATE	ALUMINIUM
21	BOLTS	STAINLESS ST. A2-70

* Available spare parts.
Remarks: All valves have a serial number. In case of non-standard valves this number must be supplied if spare parts are ordered.

LIMITING CONDITIONS	
Valve model	PRV31SS
Body design conditions	PN 63
Max.upstream pressure	50 bar
Max.downstream pressure	50 bar
Min.downstream pressure	3 bar
Max.design temperature *	80 °C
Max.recommended reducing ratio	40:1

*Other on request.

CE MARKING (PED - European Directive 97/23/EC)	
PN 63	Category
DN 40-50	1 (CE Marked)

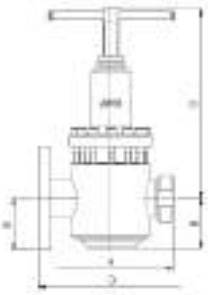

CAPACITIES		
Valve Size	40	50
KVs (m3/h)	14,4	15,4

DIMENSIONS (mm)																	
Screwed					Flg.PN16/40			Flg.PN63/100				ANSI 150 lbs			ANSI 300 lbs		
SIZE DN	A	B	C	WGT. Kgs	D*	E	WGT. Kgs	D*	E PN63	E PN100	WGT. Kgs	D*	E	WGT. Kgs	D*	E	WGT. Kgs
11/2"-40	205	86	305	14,8	201	75	18,1	260	85	85	22,1	235	63,5	17,5	248	78	20
2"-50	201	80	305	15,1	** 230	82,5	20,3	300	90	97,5	24,6	254	76	20	267	82,5	21,7

* Different lenghts and ANSI flanges available on request.
** Only available with flat flanges EN 1092-1 Type01 A. Welding neck Type11 B flanges as option with 300mm minimum face to face dimensions.

5.33	PRESSURE REDUCING VALVE

VALVOIND Srl **Via Pascoli, 5 - 24060 Bagnatica (Bergamo) Tel. 035.681919-Fax. 035.684461**

Valvoind
valvole industriali

PRV 41SS

PISTON SENSING PRESSURE REDUCING VALVE

PN16 - PN63

Ø 1/4"- Ø 3/8"- Ø 1/2"
DN10–DN15

- **OPTIONS**
  Different soft valves for water and gases.
  Relieving-Internal relief valve to allow reduce outlet pressure in a no-flow condition.
  Outlet 1/4" gauge connection on body.
  Regulating screw with top cap.
- **USE**
  Compressed air, water and other gases and liquids compatible with the construction.
- **MODELS**
  PRV41/SS – Stainless steel.
- **CONNECTIONS**
  Female screwed ISO7/1Rp(BS 21) or NPT.
  Flanged EN 1092-1 PN40 – PN320.
  Special flanges upon request.
- **INSTALLATION**
  Horizontal or vertical installation.
  An "Y" strainer should be provided upstream the valve.
  See IMI, installation and maintenance instructions.

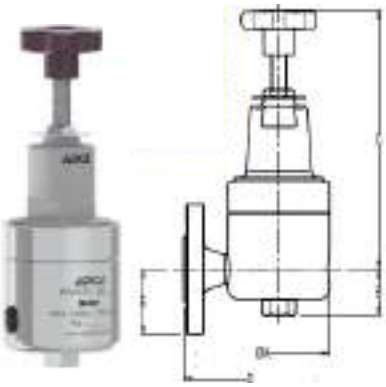

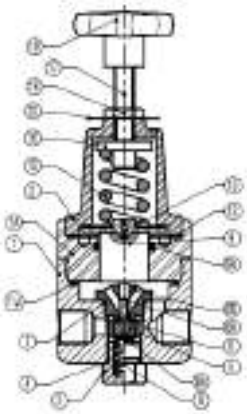

MATERIALS		
POS.	DESIGNATION	MATERIAL
1	VALVE BODY	AISI316 / 1.4401 - CF8M / 1.4408
1A	PISTON SLEEVE	AISI316 / 1.4401 - CF8M / 1.4408
2	TOP COVER	AISI316 / 1.4401 - CF8M / 1.4408
3	SEAT COVER	AISI316 / 1.4401
4	"O-RING	NBR
5	"PISTON SALVE	AISI316 / 1.4401
6	"VALVE HEAD	NBR-EPDM-PTFE etc
6A	CUSHRIOD	AISI304 / 1.4301
6B	VALVE SEAT	HARDENED ST.STEEL
7	"O-RING	NBR-EPDM-PTFE etc
8	"VALVE SPRING	AISI302 / 1.4300
9A	STRAINER SCREEN	AISI304 / 1.4301
9	PISTON	AISI316 / 1.4401
9A	O-RING	NBR-EPDM-PTFE etc
11A	O-RING	NBR-EPDM-PTFE etc
12	GASKET	ALUMINUM
13	SPRING PLATE	AISI304 / 1.4301
14	ADJUSTMENT SPRING	SPRING STEEL
15	TOP SPRING PLATE	BRASS
17	ADJUSTMENT SCREW	AISI304 / 1.4301
18	LOCKNUT	ST.STEEL A2/70
19	"HANDWHEEL	PLASTIC
20	SPRING CENT. PLATE	ALUMINUM

Available spare parts.
Remarks: All valves have a serial number. In case of non-standard valves the number must be supplied if spare parts are ordered.

LIMITING CONDITIONS	
Valve model	**PRV41SS**
Body design conditions	PN 320
Max.upstream pressure	220 bar
Max.dow nstream pressure	200 bar
Min.dow nstream pressure	3 bar
Max.design temperature *	80 °C
Max.recommended reducing ratio	40:1

*Other on request.

CAPACITIES			
Valve Size	*8*	*10*	*15*
KV's (m3/h)	0,7	0,8	0,9

CE MARKING (PED- European Directive 97/23/EC)	
PN 320	**Category**
DN10 to 15	SEP - art. 3, paragraph3

DIMENSIONS (mm)														
DIMENSIONS (mm)-Screwed					Flg. PN16/40			Flg. PN63/100			Flg. PN250/320			
SIZE DN	*A*	*B*	*C*	*WGT. Kgs*	*D**	*E*	*WGT. Kgs*	*D**	*E*	*WGT. Kgs*	*D**	*E*	*WGT. Kgs*
1/4"	80	35	200	2,7	-	-	-	-	-	-	-	-	-
3/8"	80	35	200	2,7	-	-	-	-	-	-	-	-	-
1/2"-15	80	35	200	2,7	150	47,5	4,1	210	52,5	5	230	65	7,3

* Different lenghts on request.
Note: DN15 PN16/40 face to face dim.was adopted as per DN20

POT 4S-4SS-41S

WATER SEAL POT

PN16 – PN40

Ø 3/8"
DN10

- **OPTIONS**
  Bigger sizes for special applications or
  when there is quick pressure or flow rate fluctuation.
  Different connection sizes and materials under request against extra price.
- **USE**
  In conjunction with RP45 series pressure reducing valves
- **MODELS**
  POT-4S - PN16 steel construction
  POT-4SS – PN16 stainless steel
  POT-41S – PN40 carbon steel
- **CONNECTIONS**
  3/8" Female screwed ISO7/1 Rp (BS21)
  (Compression fittings – 3/8" x 10)
- **INSTALLATION**
  Connection to the steam pipe must be always depressurized when filling the vessel with water, in order to avoid the

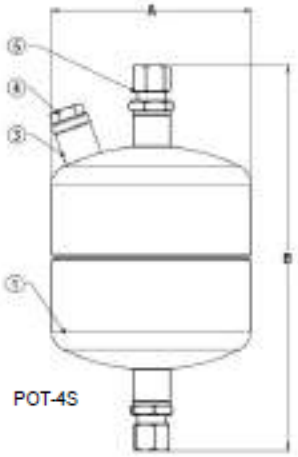

CE MARKING - GROUP 2 GASES CAT.		
RATING	SIZE	CAT.
PN16-PN40	DN 3/8"	SEP

LIMITING CONDITIONS **								
Model	Press. bar	Temp. °C	Model	Press. bar	Temp. °C	Rating	Press. bar	Temp. °C
POT-4S PN16	16	50	POT-4SS PN16	16	50	POT-41S PN40	40	50
	14	100		16	100		37	100
	13 *	195		13 *	195		31 *	239
	12	250		12	250		27	300

*PMO-Max operating pressure for saturated steam. Minimum operating temp.: -10°C
Design code: AD-Merkblatt ** Rating according to EN1092 2007

DIMENSIONS (mm)				
MODEL	A	B	VOL. Lts	WGT Kg
POT-4S	114	224	1,3	1,9
POT-4SS	114	226	1,3	1,9
POT-41S	114	232	1,3	2,8

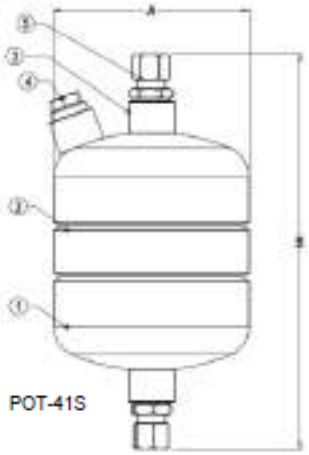

MATERIALS				
POS.	DESIGNATION	POT-4S	POT-4SS	POT-41S
1	Heads	S235JR G2 / 1.0038	ASTM A403 WP316L	EN10028-2 / P265GH / 1.0426
2	Pipe	/	ASTM A312TP 316L	EN10216-2 / P235GH / 1.0326
3	Sockets	ASTM A105 / 1.0432	AISI316 / 1.4401	S355J2G3 / 1.8570
4	Plug	ASTM A105 / 1.0432	AISI316 / 1.4401	ASTM A105 / 1.0432
5	Compression fitting	FeZn - ISO 2081 - CLL	316Ti / 1.4571 - CLS	FeZn - ISO 2081 - CLL

5.34	PRESSURE REDUCING VALVE

VALVOIND Srl **Via Pascoli, 5 - 24060 Bagnatica (Bergamo) Tel. 035.681919-Fax. 035.684461**

Valvoind
valvole industriali

PRV 47
PRV 47I

PILOT OPERATED PRESSURE REDUCING VALVES
(Steel and St. Steel)

PN16 - PN63

Da Ø 1/2" a Ø 2"
Da DN15 a DN50

- **OPTIONS**
  Soft faced valve plug for gases and steam
  Special pressure top for low pressures
  Drain connection in bottom cover
  Stellited plug and seat
- **USE**
  Saturated steam, compressed air and other gases (Group 2) compatible with the construction (except oxygen).
- **MODELS**
  PRV47 - standard model for steam
  PRV47G -compressed air and gases
- **CONNECTIONS**
  Flanged EN 1092-1 or ANSI
  Threaded BSP, NPT, SW.
- **INSTALLATION**
  Horizontal installation.
  An "Y" strainer, steam separator and steam trap should be provided upstream the valve.
  See IMI, installation and maintenance instructions.

Minimum working temperature : - 10°C
* Rating according to EN1092-1:2007
** Rating according to EN1759-1:2004

Maximum upstream pressure (steam) :	28 bar
Maximum upstream pressure (air) :	31 bar
Maximum downstream pressure:	17 bar
Minimum downstream pressure :	0,35 bar*

* 0,07 bar with low pressure top (limited at 7 bar inlet).
Pressure and temperature may change if soft seating or piston rings are used.

USEFUL NOTES ON VALVE AND PIPE SIZING
A special low pressure top assembly should be fitted for outlet pressures from 0,07 up to 0,5 bar (Fig.2).
Two regulators in parallel should be used on larger systems where minimum flow is less than 10% of maximum. If the flow is unknown it is possible to estimate it based on pipe sizing or equipment heat requirement - please consult.
The balance pipe connection is recommended to enter the downstream pipe at a minimum of 1 meter from the valve.A spool piece can be supplied to house the balancing pipe.

BODY LIMITING CONDITIONS		
FLANGED PN40 / ANSI 300 * ALLOW. PRES.	FLANGED ANSI 150 ** ALLOW. PRES.	RELATED TEMP.
40 bar	19,8 bar	50 °C
37 bar	17,7 bar	100 °C
31 bar	12,5 bar	200 °C
28 bar	10,2 bar	300 °C

CE MARKING (PED - European Directive)	
PN 40	Category
DN15 to DN32	SEP - art. 3, paragraph 3
DN40 to DN50	1 (CE Marked)

MATERIALS - PRV47 Steel construction		
POS.	DESIGNATION	MATERIAL
1	VALVE BODY	[illegible]
2	PILOT VALVE BODY	CF8 / 1.4308
3	TOP COVER	CF8 / 1.4308
3A	COVER SPRING	CF8 / 1.4308
3B	TOP COVER	DR36 / 1.7361
3C	COVER NUT	DR36 / 1.7361
4	*MAIN VALVE SEAT	AISI316 / 1.4401
5	*MAIN VALVE	HARDENED STEEL
5A	*MAIN VALVE (SOFT)	[illegible]
6	*MAIN VALVE SPRING	AISI 302 / 1.4310
7	PISTON	BRONZE DIN / ASTM B584
8	*PISTON RINGS	BRONZE / DIN / EN CW 306
9	PISTON LINER	AISI304L / 1.4306
10	BOTTOM COVER	[illegible]
11	*BOTTOM COVER GASKET	ST STEEL/GRAPHITE
12	*DIAPHRAGM	AISI301 / 1.4310
12A	*LOW PRESSURE DIAPHRAGM	AISI301 / 1.4310
13	*DIAPHRAGM GASKET	ST STEEL/GRAPHITE
13A	*DIAPHRAGM GASKET	ST STEEL/GRAPHITE
14	*PILOT VALVE GASKET	ST STEEL/GRAPHITE
15	LOWER SPRING CARRIER	BRASS
16	*ADJUSTMENT SPRING	STEEL
16A	*DIAPHRAGM SPRING	STAINLESS STEEL
17	TOP SPRING CARRIER	BRASS
18	SPRING IDENT. PLATE	ALUMINIUM
19	*PILOT VALVE	AISI416 / 1.4401
19A	*PILOT VALVE (SOFT)	PTFE/GR. RULON, ETC
20	*PILOT VALVE SEAT	AISI316 / 1.4401
21	*PILOT VALVE GASKET	COPPER
22	*PILOT VALVE SPRING	AISI302 / 1.4310
23	HANDWHEEL	PLASTICS/ST STEEL
23A	LOCKNUT	AISI304 / 1.4301
24	BOLTS	STEEL 8.8
24C	BOLTS	STEEL 8.8
25	COMPRESSION FITTING	PLATED CARBON STEEL
26	BALANCE PIPE	COPPER
27	*PILOT VALVE STRAINER	AISI304 / 1.4301
28	STRAINER NUT	AISI304 / 1.4301
29	GASKET	COPPER
30	** PRESSURE REGULATOR (Balancing)	ADCA P-19
31	** STEAM TRAP	ADCA TH21
31A	** GLOBE VALVE	ADCA [illegible]
32	** DRAIN CONNECTION NIPPLE	STEEL DN12 x 1/8"
33	SOLENOID VALVE	BRASS
34	SUSTAINING VALVE	ADCA [illegible]
35	STRAINER	ADCA [illegible] STEEL

* Available spare parts

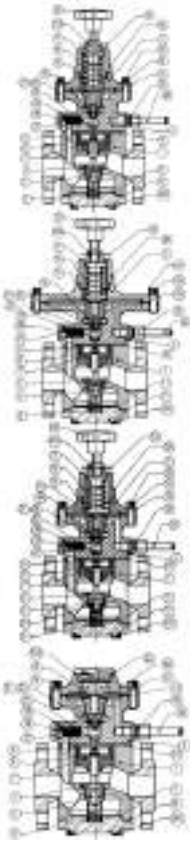

PRESSURE RANGES IN bar				
SPRING COLOUR	YELLOW NPT Diaphragm	BLUE NPT Diaphragm	RED AISI Diaphragm	BLACK AISI Diaphragm
Min. Pressure	0,07 to 0,3 bar *	0,3 to 1,5 bar **	0,5 to 8 bar **	7 to 17 bar **
Max. Pressure	5,10 to 12 bar **	/	/	/

* With low pressure top; ** Standard diaphragm

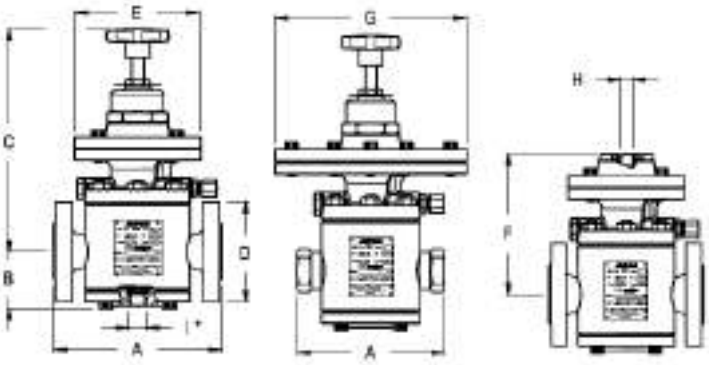

Fig.1 Fig.2 Fig.3

Fig.1 - Valve with standard diaphragm; Fig.2 - Valve with low pressure top; Fig.3 - Valve with compressed air top.

* Drain connection (option) for steam trapping. This drain connection does not replace the separator but can be useful if for example the valve stops operation for large periods.

DIMENSIONS - VALVE BODY (mm)														
DN	A EN1092-1 Flanges	A ANSI 150 Flanges	A ANSI 300 Flanges	A Threaded	B	C	D	E	F	G	H	I	WEIGHT Kgs *
15	130	124	130	140	55	177	95	23	114	135	34	33	10
20	150	124	134	140	55	177	105	23	114	135	34	33	10,5
25	160	124	141	150	55	201	115	23	114	135	34	33	14
32	180	-	-	170	55	240	140	23	135	135	34	33	15
40	200	222	234	190	75	267	150	28	144	135	34	33	22
50	230	254	267	210	75	323	175	40	170	135	34	33	31

* Provisionale values, please contact for certified figures.

MATERIALS - PRV47I Stainless steel construction		
POS.	DESIGNATION	MATERIAL
1	VALVE BODY	AISI316 / 1.4401
2	PILOT VALVE BODY	CF8 / 1.4308
3	TOP COVER	CF8 / 1.4308
3A	COVER SPRING	CF8 / 1.4308
3B	TOP COVER	AISI316 / 1.4401
3C	COVER NUT	AISI316 / 1.4401
4	*MAIN VALVE SEAT	AISI316 / 1.4401
5	*MAIN VALVE	HARDENED ST STEEL
5A	*MAIN VALVE (SOFT)	[illegible]
6	*MAIN VALVE SPRING	AISI302 / 1.4310
7	*PISTON	STAINLESS STEEL
8	*PISTON RINGS	BRONZE / DIN / EN CW 306
9	PISTON LINER	AISI304L / 1.4306
10	*BOTTOM COVER	AISI316 / 1.4401
11	*BOTTOM COVER GASKET	ST STEEL/GRAPHITE / PTFE
12	*DIAPHRAGM	AISI301 / 1.4310
12A	*LOW PRESSURE DIAPHRAGM	AISI301 / 1.4310
13	*DIAPHRAGM GASKET	ST STEEL/GRAPHITE
13A	*DIAPHRAGM GASKET	ST STEEL/GRAPHITE
14	*PILOT VALVE GASKET	ST STEEL/GRAPHITE
15	LOWER SPRING CARRIER	BRASS / ST STEEL
16	*ADJUSTMENT SPRING	STEEL / ST STEEL
16A	*DIAPHRAGM SPRING	STAINLESS STEEL
17	TOP SPRING CARRIER	BRASS
18	SPRING IDENT. PLATE	ALUMINIUM / ST STEEL
19	*PILOT VALVE	AISI416 / 1.4401
19A	*PILOT VALVE (SOFT)	PTFE/GR. RULON, ETC
20	*PILOT VALVE SEAT	AISI316 / 1.4401
21	*PILOT VALVE GASKET	COPPER / PTFE
22	*PILOT VALVE SPRING	AISI302 / 1.4310
23	HANDWHEEL	PLASTICS/ST STEEL
23A	LOCKNUT	AISI304 / 1.4301
24	BOLTS	ST STEEL A4
24C	BOLTS	ST STEEL A4
25	COMPRESSION FITTING	STAINLESS STEEL
26	BALANCE PIPE	STAINLESS STEEL
27	*PILOT VALVE STRAINER	AISI304 / 1.4301
28	STRAINER NUT	AISI304 / 1.4301
29	GASKET	COPPER / PTFE
30	** PRESSURE REGULATOR (Balancing)	ADCA P-19
31	** STEAM TRAP	ADCA TH21
31A	** GLOBE VALVE	ADCA [illegible]
32	** DRAIN CONNECTION NIPPLE	STAINLESS STEEL UNI7121 1.4306
33	SOLENOID VALVE	STAINLESS STEEL
34	SUSTAINING VALVE	ADCA P615 - ST STEEL
35	STRAINER	ADCA [illegible] ST STEEL

* Available spare parts

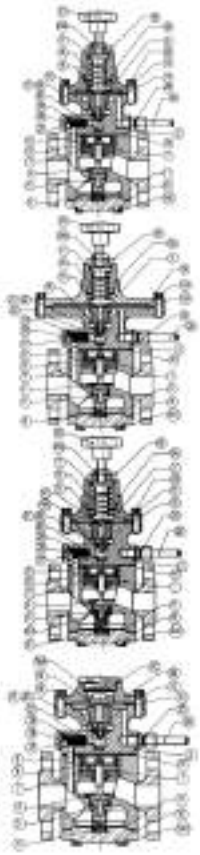

5.35	PRESSURE REDUCING VALVE

VALVOIND Srl **Via Pascoli, 5 - 24060 Bagnatica (Bergamo) Tel. 035.681919-Fax. 035.684461**

Valvoind
valvole industriali

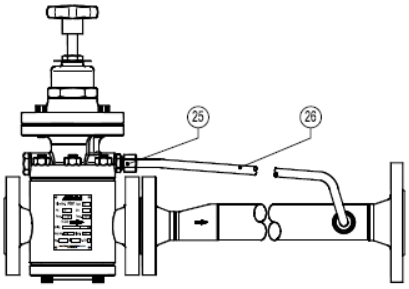

Fig.4

PRV 47 Standard for steam, compressed air or gases (Fig.4)

Description of operation: the high pressure upstream fluid is admitted to the valve and pilot valve. By compressing the regulating spring over the diaphragm, the pilot valve opens admitting regulated pressure on the top of the piston, which opens the main valve allowing the flow. The downstream pressure is then transmitted through the balance pipe, acting on the underside of the diaphragm.

Any downstream pressure increase deflects the diaphragm and the pilot valve closes, thus shutting off regulated gas to the piston which in turn closes the main valve assisted by the upstream pressure and loading spring. When the correct downstream pressure is achieved, the valve opens again, repeating the already described operation.

PRV47 with drain connection (Fig.6)

The optional drain connection is specially recommended when it is not possible to install the humidity separator close to the valve, when the valve is on no-flow during large periods or for system cleaning during start up .

Important: the balance pipe nr.26 (supplied with the valve) has to be always connected.

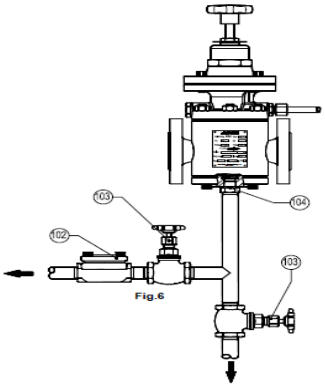

Fig.6

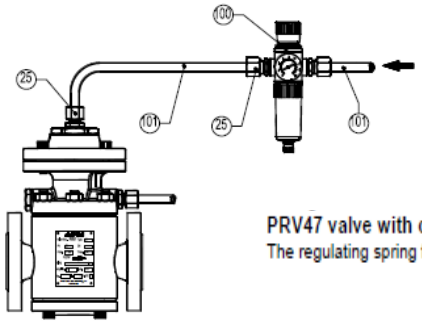

Fig.5

PRV47 valve with compressed air top for remote control (Fig.5)

The regulating spring force is placed by a compressed air signal.

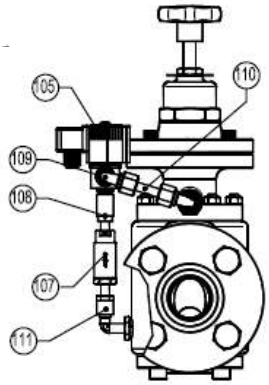

Fig.7

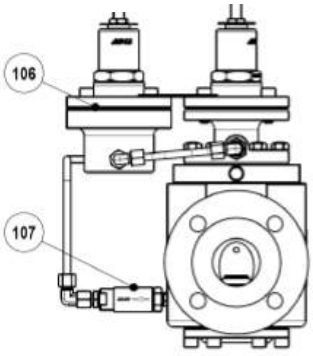

Fig.8

PRV 47 - STEAM CAPACITY TABLE (Kg/h)							
INLET barg	OUTLET barg	SATURATED STEAM					
		DN15	DN20	DN25	DN32	DN40	DN50
0,7	0,35	40	75	125	190	280	480
1	0,4	45	95	160	240	355	620
	0,6	40	83	140	210	308	535
2	0,4 ÷ 1	75	150	250	380	545	960
	1,2	65	138	230	345	515	900
	1,6	50	105	175	265	393	685
3	0,4 ÷ 1,5	100	200	335	510	750	1310
	2	85	170	290	450	660	1155
	2,2	80	165	277	416	613	1050
	2,6	60	127	203	315	467	818
4	0,4 ÷ 2	125	250	420	630	920	1580
	2,5	114	225	385	580	850	1465
	3,2	92	183	309	482	708	1205
	3,6	68	137	237	353	536	932
5	0,4 ÷ 2	150	310	512	755	1114	1895
	3	144	295	488	743	1095	1835
	4	115	225	373	578	846	1430
	4,2	105	213	343	525	770	1342
6	0,4 ÷ 3	175	355	602	919	1358	2298
	4	159	314	538	827	1217	2142
	5	119	250	411	637	941	1644
	5,2	109	217	360	568	839	1465
7	0,4 ÷ 3,5	197	410	670	1005	1540	2644
	5	178	358	587	908	1345	2306
	6	132	271	452	688	1027	1773
	6,2	122	251	416	635	934	1618
8	0,4 ÷ 4	225	471	778	1169	1759	3043
	5	221	339	730	1118	1659	2884
	6	192	385	639	976	1451	2513
	7	146	293	481	732	1085	1887
	7,2	137	274	453	692	1011	1782
9	0,4 ÷ 5	251	518	856	1325	1923	3358
	6	241	500	788	1222	1766	3095
	7	206	398	679	1068	1559	2676
	8	156	314	514	794	1142	2053
	8,2	145	292	483	741	1090	1888
10	0,4 ÷ 5	275	561	944	1468	2127	3718
	6	272	551	917	1419	2074	3619
	7	252	508	838	1288	1871	3249
	8	213	431	722	1118	1659	2831
	9	163	333	548	843	1244	2152
	9,2	150	298	493	756	1143	1929
12	1 ÷ 6	330	680	1124	1732	2541	4407
	8	311	629	1023	1575	2332	4034
	10	285	533	812	1271	1867	3202
	11	175	364	568	924	1350	2359
15	1 ÷ 8	408	839	1373	2138	3118	5403
	12	339	656	1068	1629	2441	4250
	14	199	401	662	1017	1503	2619
17	1 ÷ 9	425	883	1460	2178	3165	5343
	15	347	709	1190	1816	2694	4712
	16	207	416	717	1217	1608	2824
20	1 ÷ 12	541	1062	1774	2746	4001	6971
	15	459	931	1552	2335	3476	6184
	17	391	648	988	1748	2840	4698
25	2,5 ÷ 12	685	1337	2191	3360	4971	8392
	15	680	1320	2183	3356	4877	8284
	17	641	1256	2084	3156	4670	7866
28	5 ÷ 15	781	1521	3355	3864	5611	9862
	17	763	1471	3259	3768	5506	9652

PRV 47 - COMP. AIR CAPACITY TABLE (Nm3/h-0ºC-1,013bar)							
INLET barg	OUTLET barg	COMPRESSED AIR					
		DN15	DN20	DN25	DN32	DN40	DN50
0,7	0,35	15	31	50	70	111	191
1	0,4	16	33	51	79	113	194
	0,6	27	55	90	138	199	343
2	0,4 ÷ 1	60	122	201	307	444	763
	1,2	54	109	180	276	399	686
	1,6	45	91	150	230	333	572
3	0,4 ÷ 1,5	120	240	300	460	666	1150
	2	105	210	251	384	555	1050
	2,2	48	93	152	232	334	576
	2,6	45	61	101	154	223	384
4	0,4 ÷ 2	150	238	499	739	1089	1825
	2,5	135	208	449	568	978	1635
	3,2	119	177	398	492	867	1444
	3,6	60	124	202	154	444	763
5	0,4 ÷ 2	180	360	505	768	1110	1908
	3	165	330	556	691	997	1716
	4	151	298	404	613	885	1526
	4,2	136	285	383	582	840	1449
6	0,4 ÷ 3	210	488	696	1046	1523	2580
	4	195	437	648	959	1412	2389
	5	150	345	494	738	1079	1817
	5,2	135	315	443	664	968	1627
7	0,4 ÷ 3,5	240	480	804	1200	1740	2989
	5	210	421	701	1046	1524	2640
	6	150	301	499	766	1104	1829
	6,2	105	211	349	529	773	1280
8	0,4 ÷ 4	270	546	798	1353	1748	3411
	5	265	516	747	1276	1635	3220
	6	225	449	710	1125	1635	2762
	7	180	361	600	892	1296	2184
	7,2	156	312	540	768	1128	1978
9	0,4 ÷ 5	301	612	1011	1507	2244	3789
	6	270	553	910	1350	1980	3474
	7	240	492	816	1230	1798	2970
	8	180	360	596	903	1288	2247
	8,2	165	329	547	826	1176	2056
10	0,4 ÷ 5	330	659	1116	1692	2412	4173
	6	314	628	1065	1615	2301	3983
	7	288	599	1004	1503	2202	3810
	8	240	492	806	1212	1770	3022
	9	192	360	658	898	1350	2280
	9,2	181	342	628	852	1283	2165
12	1 ÷ 6	390	792	1300	1978	2844	4917
	8	360	732	1219	1827	2622	4497
	10	270	553	910	1350	1980	3474
	11	210	468	696	1046	1523	2580
15	1 ÷ 8	480	972	1602	2427	3564	6072
	12	375	762	1272	1923	2784	4692
	14	255	528	889	1332	1896	3398
17	1 ÷ 9	540	912	1819	2737	3984	6818
	15	315	708	1179	1764	2520	4418
	16	255	528	889	1332	1896	3398
20	1 ÷ 12	615	1254	2379	3153	4578	7911
	15	534	900	1799	2707	3940	6738
	17	450	901	1497	2246	3336	5796
25	2,5 ÷ 12	780	1590	2689	3982	5790	9902
	15	756	1530	2548	3828	5616	9600
	17	720	1464	2412	3707	5310	9123
28	5 ÷ 15	870	1770	2910	4430	6390	10950
	17	840	1724	2820	4320	6180	10680

PRV47E with solenoid valve for electric remote control (Fig.7)

This valve version operates like the standard valve but it allows a remote control closure by means of a switching or timer control. When closing the solenoid valve, the pressure signal to the pilot valve is interrupted and thus also the main valve remains closed.

PRS47 pressure reducing and sustaining valve (Fig.8)

This version is a combination of pressure reducing valve and pressure sustaining valve. Compressing the spring of the PS7 (nr.106) pressure sustaining valve the same is closed till a desired set pressure, interrupting the signal to the PRV47 pilot valve and consequently it will remain closed.

Since the pressure supply to the PS7 valve reaches the desired set pressure it will allow the flow and fluid signal to the PRV47 pilot valve, it will than work as already described.

PS47 pressure sustaining valve (available on request)

The pressure sustaining valves are particularly recommended in those systems where a limited flow rate is available and it is necessary to guaranty the supply to some critical process applications. Installing this valve in the supply of non-critical application limited to the minimum required pressure, they will close in case of excess of consumption and consequent pressure drop in the system, keeping the remaining flow available for the critical application.

In general this valve maintains the upstream pressure under control.

5.36	PRESSURE REDUCING VALVE

VALVOIND Srl **Via Pascoli, 5 - 24060 Bagnatica (Bergamo) Tel. 035.681919-Fax. 035.684461**

Valvoind
valvole industriali

PRV 47/2

PILOT OPERATED PRESSURE REDUCING VALVES

PN16 – PN40

Da Ø 2 1/2" a Ø " 4
a DN65 a DN100

- **OPTIONS**
  Soft faced valve plug for gases and steam
  Special pressure top for low pressures
  Stellited plug and seat
  Balance pipe connected to the valve body
- **USE**
  Saturated steam, compressed air and other gases (Group 2) compatible with the construction (except oxygen).
- **MODELS**
  PRV47/2 - standard model for steam
  PRV47/2G -compressed air and gases
- **CONNECTIONS**
  Flanged EN 1092-1
- **INSTALLATION**
  Horizontal installation.
  An "Y" strainer, steam separator and steam trap should be provided upstream the valve.
  See IMI, installation and maintenance instructions.

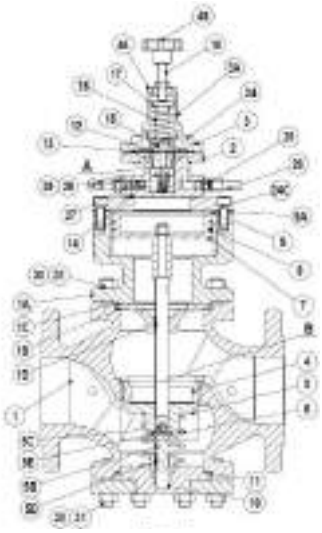

VALVE BODY LIMITING CONDITIONS			
PN16 *		PN40 *	
ALLOW. PRESS.	RELATED TEMP.	ALLOW. PRESS.	RELATED TEMP.
16 bar	-10 50 °C	40 bar	-10 50°C
13,3 bar	200 °C	33,3 bar	200 °C
12,1 bar	250 °C	30,4 bar	250 °C
11 bar	300 °C	27,6 bar	300 °C

* Rating according to EN 1092-1: 2007

CE MARKING (PED - European Directive 97/23/EC)		
PN 16	PN 40	Category
DN65 to DN100	DN40 to DN100	1 (CE Marked)

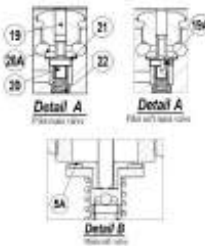

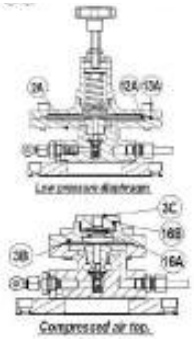

MATERIALS - PRV 47/2 Carbon steel construction		
POS.	DESCRIPTION	MATERIAL
1	VALVE BODY	ASTM A216 WCB / 1.0619
1A	PISTON HOUSING	ASTM A216 WCB / 1.0619
1B	STEM GUIDE	Bronze B62 ASTM B145 97
1C	*GASKET	ST STEEL/GRAPHITE
1D	*PLAIN BEARING	BRONZE
2	PILOT VALVE BODY	CF8 / 1.4308
2A	PILOT VALVE BODY	CF8 / 1.4308
3	TOP COVER	CF8 / 1.4308
3A	COVER SPRING	CF8 / 1.4308
3B	TOP COVER	CF8 / 1.4308
3C	COVER NUT	C45E / 1.1191
4	*MAIN VALVE SEAT	AISI 416 / 1.4401
5	*MAIN VALVE	HARDENED ST STEEL
5A	*MAIN VALVE (SOFT)	SEALING STEEL/PTFE/RUBBER
5B	*VALVE STEM	AISI 416 / 1.4401
5C	*BALL	AISI 440C / 1.4125
5D	* PLAIN BEARING	BRONZE
5E	*SPRING PIN	AISI 304 / 1.4301
6	*MAIN VALVE SPRING	AISI 302 / 1.4300
7	*PISTON	Bronze B62 ASTM B145 97
8	*PISTON RINGS	BRONZE / FKM / EPDM / NBR
9	*PISTON LINER	AISI 304L / 1.4306
9A	*GASKET	ST STEEL/GRAPHITE
10	BOTTOM COVER	C45E / 1.1191
11	*BOTTOM COVER GASKET	ST STEEL/GRAPHITE
12	*DIAPHRAGM	AISI 301 / 1.4310
12A	*LOW PRESSURE DIAPHRAGM	AISI 301 / 1.4310
13	*DIAPHRAGM GASKET	ST STEEL/GRAPHITE
13A	*DIAPHRAGM GASKET	ST STEEL/GRAPHITE
14	*PILOT VALVE GASKET	ST STEEL/GRAPHITE
15	LOWER SPRING CARRIER	BRASS
16	*ADJUSTMENT SPRING	STEEL
16A	DIAPHRAGM SPRING	STAINLESS STEEL
16B	*O-RING	EPDM
17	TOP SPRING CARRIER	BRASS
18	LOCKNUT	AISI 304 / 1.4301
19	*PUSH ROD	AISI 416 / 1.4401
19A	*PILOT VALVE (SOFT)	PEEK/PTFE/RUBBER ETC
20	*PILOT VALVE PLUG	HARDENED ST STEEL
20A	*PILOT VALVE SEAT	AISI 416 / 1.4401
21	*PILOT VALVE GASKET	COPPER
22	*PILOT VALVE SPRING	AISI 302 / 1.4300
24	BOLTS	STEEL 10.9
24C	BOLTS	STEEL 10.9
25	COMPRESSION FITTING	PLATED CARBON STEEL
26	BALANCE PIPE	COPPER
27	PILOT VALVE STRAINER SCREEN	AISI 304 / 1.4301
28	*STRAINER NUT	AISI 304 / 1.4301
29	GASKET	COPPER
30	STUDS	ISO M8x80 / 1.6582
31	NUTS	STEEL C35
32	SPRING CONT. PLATE	ALUMINUM
33	HANDWHEEL	PLASTICOT STEEL
33A	** PRESSURE REGULATOR (Balancing)	ADCA P-10
33B	SOLENOID VALVE	BRASS
33C	*STRAINER	AISI 316 / 1.4401 ST STEEL

* Available spare parts

LIMITING CONDITIONS (Steam)		
	PN 16	PN40
Max upstream pressure	13 bar	28 bar
Max downstream pressure	13 bar	17 bar
Min downstream pressure *	0,35 bar	0,35 bar
Max operating temperature	250°C	250°C
Max reducing ratio	See capacity table	
Rangeability	10:1	10:1
Max cold hydraulic test	17 bar	17 bar
Max hyd. factory valve body test	24 bar	60 bar

* 0,07 bar with low pressure top (limited at 7 bar inlet)

Pressure and temperature may change if soft seating or soft piston rings are used.

We reserve the right to change the design and material of this product without notice.

PRESSURE RANGES IN bar				
SPRING COLOUR	GREEN W/1 Diaphragm	BLUE W/1 Diaphragm	RED W/2 Diaphragms	BLACK W/2 Diaphragms
Red. Pressure	0,07 to 0,5 bar *	1,5 to 5,5 bar **	3,5 to 8,5 bar **	7 to 17 bar **
Red. Pressure	0,35 to 2 bar **	/	/	/

* With low pressure top; **Standard diaphragm

DIMENSIONS - VALVE BODY (mm)								
DN	ø EN1092-1 Flanges	B	C	E	F	G	H	WEIGHT Kgs
65	290	150	470	130	340	195	1/4"	46,7
80	310	160	480	130	350	195	1/4"	50,7
100	350	180	515	130	385	195	1/4"	70,0

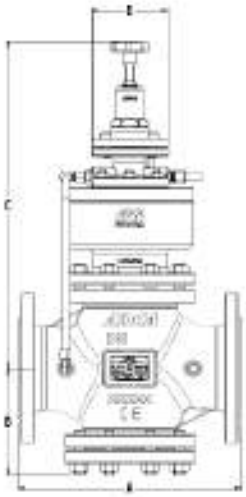

Fig.1

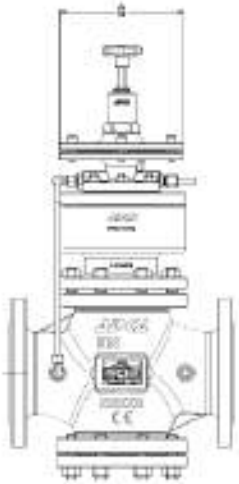

Fig.2

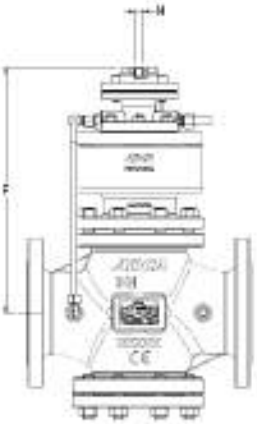

Fig.3

Fig.1 - Valve with standard diaphragm; Fig.2 - Valve with low pressure top; Fig.3 - Valve with compressed air top.

VALVOIND Srl **Via Pascoli, 5 - 24060 Bagnatica (Bergamo) Tel. 035.681919-Fax. 035.684461**

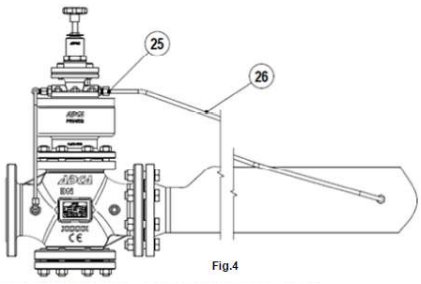

Fig.4

PRV 47/2 Standard for steam, compressed air or gases (Fig.4)

Description of operation: the high pressure upstream fluid is admitted to the valve and pilot valve. By compressing the regulatir spring over the diaphragm, the pilot valve opens admitting regulated pressure on the top of the piston, which opens the ma valve allowing the flow. The downstream pressure is then transmitted through the balance pipe, acting on the underside of th diaphragm.

Any downstream pressure increase deflects the diaphragm and the pilot valve closes, thus shutting off regulated gas to th piston which in turn closes the main valve assisted by the upstream pressure and loading spring. When the correct downstrea pressure is achieved, the valve opens again, repeating the already described operation.

Important: the balance pipe nr.26 (supplied with the valve) must always be connected unless the valve wa supplied with the balance pipe connected to the valve body. However, the fitting of the balance pipe is high recommended when:

-The reduced pressure is below 55% of the inlet pressure (mandatory for pressure reductions greater than 10:1)

-Instability of reduced pressure occurs

-When a low pressure top assembly is fitted

PRV 47/2 - STEAM CAPACITY TABLE (Kg/h)

INLET barg	OUTLET barg	SATURATED STEAM								
		DN15	DN20	DN25	DN32	DN40	DN50	DN65	DN80	100
0,7	0,35	40	75	125	190	280	480	-	-	-
1	0,4	45	85	150	240	355	620	-	-	-
	0,6	40	83	140	210	308	535	-	-	-
2	0,4 ÷ 1	75	150	250	380	545	950	1490	1880	3390
	1,2	65	138	230	345	515	900	1335	1685	3022
	1,6	50	105	175	265	393	685	-	-	-
3	0,4 ÷ 1,5	100	200	335	510	750	1310	1980	2475	4358
	2	85	170	290	450	660	1155	1732	2175	3962
	2,2	80	165	277	418	613	1060	1585	1981	3616
	2,6	60	127	203	315	467	818	-	-	-
4	0,4 ÷ 2	125	250	420	630	920	1580	2530	3170	5696
	2,5	114	225	385	580	850	1465	2328	2923	5249
	3,2	92	183	309	482	708	1206	1735	2179	3913
	3,6	68	137	237	353	535	932	-	-	-
5	0,4 ÷ 2	150	310	512	756	1114	1895	3022	3765	6733
	3	144	295	488	743	1095	1835	2869	3515	6486
	4	115	225	373	578	846	1430	2130	2675	4852
	4,2	105	213	343	525	770	1342	-	-	-
6	0,4 ÷ 3	175	355	602	915	1358	2298	3566	4453	8021
	4	169	314	638	827	1217	2142	3219	4012	7229
	5	119	250	411	637	941	1644	2275	2870	5150
	5,2	109	217	360	566	839	1465	-	-	-
7	0,4 ÷ 3,5	197	410	670	1005	1540	2644	3959	4952	8911
	5	178	358	587	908	1345	2306	3513	4405	7921
	6	132	271	452	689	1027	1773	2764	3022	5416
	6,2	122	251	416	635	934	1618	-	-	-
8	0,4 ÷ 4	225	471	778	1169	1759	3043	4605	5745	10308
	5	221	339	730	1118	1639	2864	4305	5395	9704
	6	192	385	639	976	1451	2513	3761	4704	8467
	7	148	293	481	732	1065	1887	2727	3158	5696
	7,2	137	274	453	692	1011	1782	-	-	-
9	0,4 ÷ 5	251	518	856	1325	1923	3358	5051	6334	11387
	6	241	500	788	1222	1766	3095	4653	5794	10396
	7	206	398	679	1068	1559	2676	4060	5051	8961
	8	156	314	514	794	1142	2053	2871	3319	5991
	8,2	145	292	483	741	1090	1888	-	-	
10	0,4 ÷ 5	275	561	944	1468	2127	3718	5552	7031	12377
	6	272	551	917	1419	2074	3619	5443	5830	12270
	7	252	508	838	1268	1871	3249	4951	6187	10891
	8	213	431	722	1118	1669	2831	4108	5149	9208
	9	163	333	548	843	1244	2152	2721	3466	6190
	9,2	150	298	493	756	1143	1929	-	-	-
12	1 ÷ 6	330	680	1124	1732	2541	4407	6631	8216	14850
	8	311	629	1023	1575	2332	4094	6090	7573	13952
	10	255	533	812	1271	1867	3202	4903	5952	9903
	11	175	364	558	824	1350	2359	2920	3512	6536
15	1 ÷ 8	408	839	1373	2138	3118	5403	8164	10393	18317
	12	339	696	1068	1629	2441	4250	6365	7969	14356
	14	199	401	662	1017	1503	2619	3968	3861	6438
17	1 ÷ 9	425	863	1465	2178	3165	5343	8054	11360	20390
	15	347	709	1190	1815	2694	4712	6870	7363	14855
	16	207	416	717	1217	1808	2824	3598	4312	6330
20	1 ÷ 12 [2 ÷ 12]*	541	1062	1774	2748	4001	6971	10390	13363	23765
	15	459	931	1552	2335	3476	6184	9156	11382	20298
	17	391	648	988	1748	2840	4686	6898	7626	9476
25	2,5 ÷ 12 [6 ÷ 12]*	685	1337	2151	3360	4871	8382	12870	15845	29200
	15	680	1320	2183	3356	4877	8284	12690	15710	29510
	17	641	1256	2084	3156	4670	7896	12370	14950	27720
28	5 ÷ 15 [6 ÷ 15]*	781	1521	3355	3854	5611	9882	14870	18380	33154
	17	763	1471	3259	3768	5506	9652	14340	17770	32665

Detailed information concerning the sizes DN15 to DN50 available in the catalogue IS PRV47.10

* Minimum outlet pressures for the sizes DN65 to DN100.

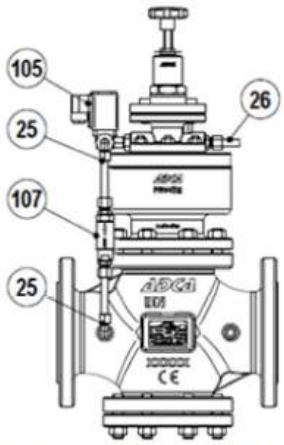

Fig.7

PRV47/2E with solenoid valve for electric remote control (Fig.7)

This valve version operates like the standard valve but it allows a remote control closure by means of a switching or timer control.

When closing the solenoid valve, the pressure signal to the pilot valve is interrupted and thus also the main valve remains closed.

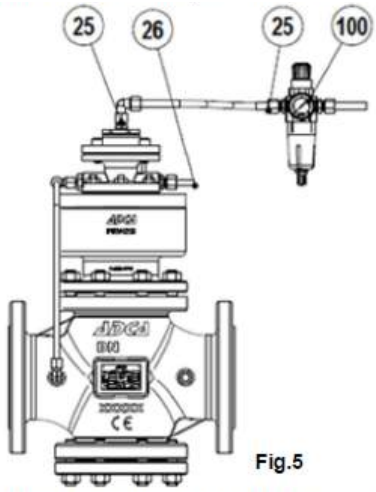

Fig.5

PRV47/2 valve with compressed air top for remote control (Fig.5)

The regulating spring force is placed by a compressed air signal.

5.38	PRESSURE REDUCING VALVE

VALVOIND Srl **Via Pascoli, 5 - 24060 Bagnatica (Bergamo) Tel. 035.681919-Fax. 035.684461**

Valvoind
valvole industriali

PRV 300 SS

HIGH ACCURACY PRESSURE REDUCING VALVE

PN16

Da Ø 1/2" a Ø 3/4"
a DN15 a DN20

- **OPTIONS**
  Different soft valves for water and gases.
  Relieving-Internal relief valve to allow reduce outlet pressure in a no-flow condition.
  Built-in strainer.
  Outlet 1/4" gauge connection on body.
  Regulating screw with top cap.
- **USE**
  Compressed air, water and other gases and liquids compatible with the construction.
- **MODELS**
  PRV300/SS – Stainless steel
- **CONNECTIONS**
  Female screwed ISO7/1Rp(BS 21) .
  Flanged EN 1092-1 PN40 or ANSI.
- **INSTALLATION**
  Horizontal installation.
  An "Y" strainer should be provided upstream the valve.
  See IMI, installation and maintenance instructions.

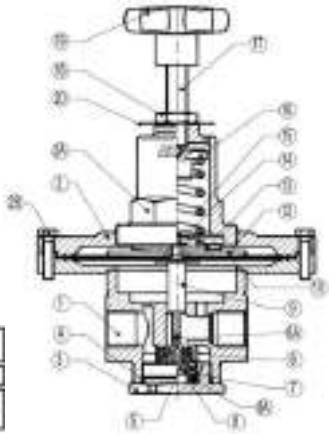

CAPACITIES		
Valve Size	15	20
Kvs (m3/h)	2.1	2.4

CEMARKING (PED - European Directive 97/23/EC)	
PN 16	Category
DN 15 to 20	SEP - art. 3, paragraph3

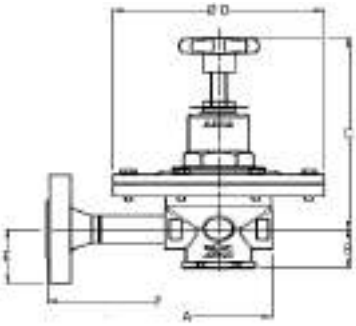

MATERIALS		
POS.	DESIGNATION	MATERIAL
1	VALVE BODY	AISI316 / 1.4401 ; CF8M / 1.4408
2	COVER	AISI316 / 1.4401
2A	SPRING COVER	AISI316 / 1.4401 ; CF8M / 1.4408
2B	BOLTS	ST.STEEL A2-70
3	SEAT COVER	AISI316 / 1.4401
4	*O-RING	NBR
5	*PISTON VALVE	AISI316 / 1.4401
6	*VALVE HEAD	NBR
6A	*PUSHROD	AISI316 / 1.4401
7	*O-RING	NBR
8	*VALVE SPRING	AISI302 / 1.4300
8A	*STRAINER SCREEN	AISI304 / 1.4301
9	PUSHER DISC	AISI304 / 1.4301
10	*DIAPHRAGM	RUBBER
13	SPRING PLATE	AISI304 / 1.4301
14	NUT	ST.STEEL A2-70
15	*ADJUSTMENT SPRING	STEEL
16	TOP SPRING PLATE	BRASS
17	ADJUSTMENT SCREW	AISI304 / 1.4301
18	LOCKNUT	ST.STEEL A2-70
19	HANDWHEEL	PLASTIC
20	SPRING IDENT. PLATE	ALUMINIUM

* Available spare parts.
Remarks: All valves has a serial number. In case of non-standard valves this number must be supplied if spare parts are ordered.

LIMITING CONDITIONS	
Valve model	PRV300SS
Body design conditions	PN 16
Max upstream pressure	16 bar
Max downstream pressure	1.7 bar
Min downstream pressure	0.05 bar
Max design temperature *	80 °C
Max recommended reducing ratio	40:1

*Other on request.

DIMENSIONS (mm)								
Screwed						EN 1092-1 Flanges		
SIZE DN	A	B	C	D	WGT. Kgs	E	F *	WGT. Kgs
1/2"-15	80	38	185	160	3.9	47.5	260	5.3
3/4"-20	80	38	185	160	3.9	52.5	260	5.9

* Different lenghts on request.

PRV 300 SS

HIGH ACCURACY PRESSURE REDUCING VALVE

PN16

Da Ø 1" a Ø 1 1/4"
a DN25 a DN32

- **OPTIONS**
  Different soft valves for water and gases.
  Relieving-Internal relief valve to allow reduce outlet pressure in a no-flow condition.
  Built-in strainer.
  Outlet 1/4" gauge connection on body.
  Regulating screw with top cap.
- **USE**
  Compressed air, water and other gases and liquids compatible with the construction.
- **MODELS**
  PRV300/SS – Stainless steel
- **CONNECTIONS**
  Female screwed ISO7/1Rp(BS 21) .
  Flanged EN 1092-1 PN40 or ANSI.
- **INSTALLATION**
  Horizontal installation.
  An "Y" strainer should be provided upstream the valve.
  See IMI, installation and maintenance instructions.

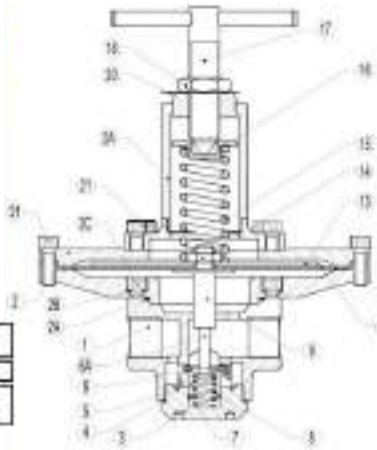

CAPACITIES		
Valve Size	25	32
Kvs (m3/h)	6.5	7.2

CEMARKING (PED - European Directive 97/23/EC)	
PN 16	Category
DN 25 to 32	SEP - art. 3, paragraph3

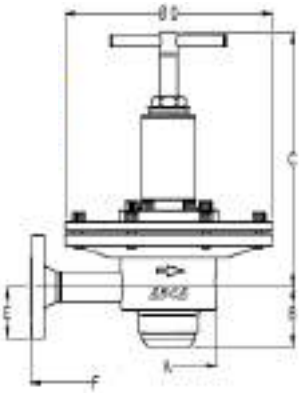

MATERIALS		
POS.	DESIGNATION	MATERIAL
1	VALVE BODY	AISI316 / 1.4401 ; CF8M / 1.4408
2	COVER	ST.STEEL (1.4401)
2A	SPRING COVER	AISI316 / 1.4401 ; CF8M / 1.4408
2B	BOLTS	ST.STEEL A2-70
3	SEAT COVER	AISI316 / 1.4401
4	*O-RING	NBR
5	*PISTON VALVE	AISI316 / 1.4401
6	*VALVE HEAD	NBR
6A	*PUSHROD	AISI316 / 1.4401
7	*O-RING	NBR
8	*VALVE SPRING	AISI302 / 1.4300
8A	**STRAINER SCREEN	AISI304 / 1.4301
9	PUSHER DISC	AISI304 / 1.4301
10	*DIAPHRAGM	RUBBER
13	SPRING PLATE	AISI304 / 1.4301
14	NUT	ST.STEEL A2-70
15	*ADJUSTMENT SPRING	STEEL
16	TOP SPRING PLATE	AISI304 / 1.4301
17	ADJUSTMENT SCREW	AISI304 / 1.4301
18	LOCKNUT	ST.STEEL A2-70
20	SPRING IDENT. PLATE	ALUMINIUM

* Available spare parts ** Optional
Remarks: All valves has a serial number. In case of non-standard valves this number must be supplied if spare parts are ordered.

LIMITING CONDITIONS	
Valve model	PRV300SS
Body design conditions	PN 16
Max upstream pressure	16 bar
Max downstream pressure	1.7 bar
Min downstream pressure	0.05 bar
Max design temperature *	80 °C
Max recommended reducing ratio	40:1

*Other on request.

DIMENSIONS (mm)								
Screwed						EN 1092-1 Flanges		
SIZE DN	A	B	C	D	WGT. Kgs	E	F *	WGT. Kgs
1"-25	**105/125	66	**295/285	270	15.9	57.5	**160/320	18.5
1 1/4"-32	**105/125	66	**295/285	270	15.9	70	320	22.3

* Different lenghts on request.
** Standard face to face dimension in case of CF8M valve body

5.39	PRESSURE REDUCING VALVE

VALVOIND Srl **Via Pascoli, 5 - 24060 Bagnatica (Bergamo) Tel. 035.681919-Fax. 035.684461**

Valvoind
valvole industriali

PRV 300SS

HIGH ACCURACY PRESSURE REDUCING VALVE

PN16

Da Ø 1 1/2" a Ø " 2
a DN40 a DN50

- **OPTIONS**
  Different soft valves for water and gases.
  Relieving-Internal relief valve to allow reduce outlet pressure in a no-flow condition.
  Built-in strainer.
  Outlet 1/4" gauge connection on body.
  Regulating screw with top cap.
- **USE**
  Compressed air, water and other gases and liquids compatible with the construction.
- **MODELS**
  PRV300/SS – Stainless steel
- **CONNECTIONS**
  Female screwed ISO7/1Rp(BS 21) .
  Flanged EN 1092-1 PN40 or ANSI.
- **INSTALLATION**
  Horizontal installation.
  An "Y" strainer should be provided upstream the valve.
  See IMI, installation and maintenance instructions.

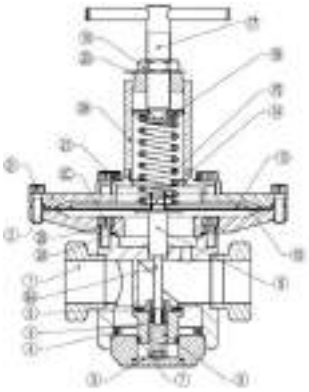

MATERIALS		
POS.	DESIGNATION	MATERIAL
1	VALVE BODY	AISI316 / 1.4401 / CF8M / 1.4408
2	COVER	AISI316 / 1.4401
2A	SPRING COVER	AISI316 / 1.4401 / CF8M / 1.4408
2B	BOLTS	ST.STEEL A2-70
3	SEAT COVER	AISI316 / 1.4401
4	O-RING	NBR
5	SEAT VALVE	AISI316 / 1.4401
6	VALVE HEAD	NBR
6A	*SEALING	AISI316 / 1.4401
7	O-RING	NBR
8	VALVE SPRING	SPRING STEEL
9	PUSHER DISC	AISI316 / 1.4301
10	DIAPHRAGM	RUBBER
11	SPRING PLATE	AISI304 / 1.4301
12	NUT	ST.STEEL A2-70
13	*ADJUSTMENT SPRING	STEEL
14	TOP SPRING PLATE	BRASS
15	ADJUSTMENT SCREW	AISI316 / 1.4301
16	LOCKNUT	ST.STEEL A2-70
20	SPRING IDENT. PLATE	ALUMINIUM

* Available spare parts.
Remarks: All valves has a serial number. In case of non-standard valves this number must be supplied if spare parts are ordered.

LIMITING CONDITIONS	
Valve model	PRV300SS
Body design conditions	PN 16
Max upstream pressure	16 bar
Max downstream pressure	1,7 bar
Min downstream pressure	0,05 bar
Max design temperature *	80 °C
Max recommended reducing ratio	40:1

*Other on request.

CAPACITIES		
Valve Size	40	50
KVs (m3/h)	12,7	13,7

CE MARKING (PED - European Directive 97/23/EC)	
PN 16	Category
DN 40 to 50	SEP - art. 3, paragraph3

DIMENSIONS (mm)								
	Screwed					EN 1092-1 Flanges		
SIZE DN	A	B	C	D	WGT. Kgs	E	F *	WGT. Kgs
1 1/2"-40	105	90	305	270	23,2	75	320	29
2"-50	205	90	305	270	23,6	92,5	320	28,7

* Different lenghts on request.

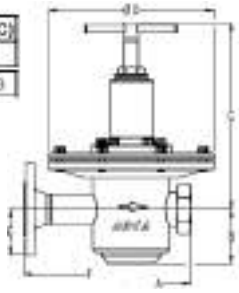

PS 4

DIAPHRAGM SENSING PRESSURE SUSTAINING VALVE

PN16 – PN40

Da Ø 1/2" a Ø 1"
a DN15 a DN25

- **OPTIONS**
  Different soft valves for water and gases.
  1/4" pressure gauge connection on body.
  Regulating screw with top cap.
- **USE**
  Compressed air, water and other gases and liquids compatible with the construction.
- **MODELS**
  PS4S – Cast steel
  PS4I – Stainless steel wetted parts (complete stainless steel on request)
- **CONNECTIONS**
  Female screwed ISO7/1Rp(BS 21) or NPT.
- **INSTALLATION**
  Horizontal installation.
  An "Y" strainer should be provided upstream the valve.
  See IMI, installation and maintenance instructions.

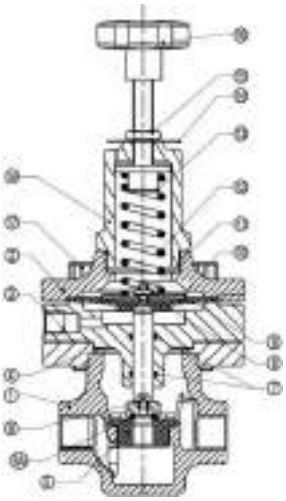

MATERIALS			
POS.	DESIGNATION	PS4S	PS4I
1	VALVE BODY	ASTM A216WCB / 1.0619	CF8M / 1.4408
2	TOP COVER	CF8 / 1.4308	CF8 / 1.4308
2A	COVER SPRING	CF8 / 1.4308	CF8 / 1.4308
3	GUIDE PLATE	S355J2G3 / 1.0570	AISI316 / 1.4401
4	* GASKET	GRAPH.-EPDM-PTFE,...	GRAPH.-EPDM-PTFE...
5	* VALVE SEAT	AISI316 / 1.4401	AISI316 / 1.4401
6	* STEM AND PLUG	AISI316 / 1.4401	AISI316 / 1.4401
6A	* VALVE SEALING	NBR-EPDM-PTFE,etc	NBR-EPDM-PTFE,etc
7	* O-RING	NBR-EPDM-PTFE,etc	NBR-EPDM-PTFE,etc
8	PUSHER DISC	AISI316 / 1.4401	AISI316 / 1.4401
9	* DIAPHRAGM	NBR-EPDM-PTFE,etc	NBR-EPDM-PTFE,etc
10	SPRING PLATE	AISI304 / 1.4301	AISI304 / 1.4301
11	NUT	ST.STEEL A2-70	ST.STEEL A2-70
12	* ADJUST. SPRING	SPRING STEEL	SPRING STEEL
13	TOP SPRING PLATE	BRASS	BRASS
14	SPRING ID. PLATE	ALUMINIUM	ALUMINIUM
15	LOCKNUT	ST.STEEL A2-70	ST.STEEL A2-70
16	HANDWHEEL	PLASTIC	PLASTIC
17	**BOLTS**	**STEEL 8.8**	**A2 - 70**

* Available spare parts.
Remarks: All valves has a serial number. In case of non-standard valves this number must be supplied if spare parts are ordered.

LIMITING CONDITIONS	
Valve model	PS4
Body design conditions	PN 40
Max.upstream pressure	15 bar
Min.upstream pressure	0,35 bar
Max.design temperature *	80 °C

*Other on request.

Sustaining valves are not substitute of safety valves or vacuum relief valves

CE MARKING (PED-European Directive 97/23/EC)	
PN 16-PN40	Category
DN 15 to 25	SEP - art. 3, paragraph3

CAPACITIES			
Valve Size	15	20	25
KVs (m3/h)	3,6	3,6	3,7

DIMENSIONS (mm)							
SIZE DN	A	B	C	D	E	F	WGT. Kgs
15	100	37,5	247	120	66	1/4"	6,6
20	100	37,5	247	120	66	1/4"	6,6
25	100	37,5	247	120	66	1/4"	6,6

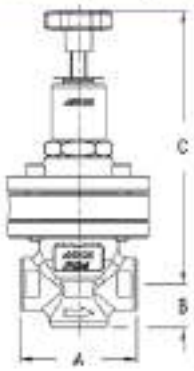

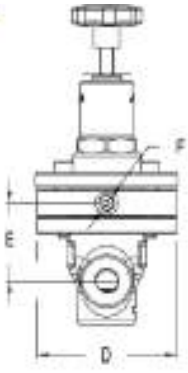

5.40	PRESSURE REDUCING VALVE

VALVOIND Srl **Via Pascoli, 5 - 24060 Bagnatica (Bergamo) Tel. 035.681919-Fax. 035.684461**

Valvoind
valvole industriali

RP45

PRESSURE REDUCING VALVE (ANSI)

ANSI 150-300

Da Ø 1/2" a Ø 4"
da DN 15 a DN100

- **OPTIONS**
  Soft sealing for steam. Nitrile rubber soft seated version for air and gas applications where tight shut-off is required. Low-noise flow divider
- **USE**
  Steam, compressed air and other gases and liquids compatible with the construction.
- **MODELS**
  RP45S and RP45ST or N – Cast steel
  RP45I and RP45IT or N – Stainless Steel
  (All wetted parts free of ferrous metal or in St.Steel.).
  Suffix T : Soft seated with PTFE/GR
  Suffix N : soft seated with nitrile rubber
- **CONNECTIONS**
  Flanged ANSI B16.5 150# and 300#
- **INSTALLATION**
  Horizontal installation. An "Y" or "T"strainer, steam separator and steam trap should be provided upstream the valve. See IMI, installation and maintenance instructions.

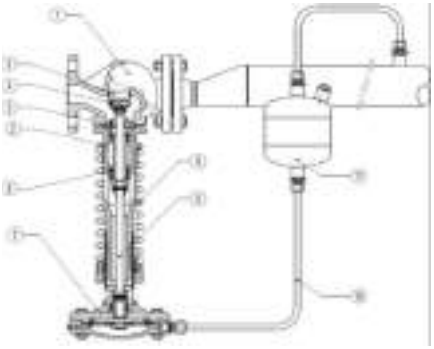

MATERIALS		
POS.	***DESIGNATION***	***MATERIAL***
1	Valve body RP45S	A 216 WCB / 1.0619
1	Valve body RP45I	CF8M / 1.4408
2	Piston body RP45S	GJS-400-15 / 0.7040
2	Piston body RP45I	GJS-400-15 / 0.7040 Nickel plated
3	Valve seat	HARDENED ST.STEEL
4	* Valve disc	HARDENED ST.STEEL
4	* Soft valve disc	AISI304/1.4301 ;NBR
5	Guide	AISI 304 / 1.4301
6	* Bellows	AISI 316 Ti / 1.4571
7	* Diaph.chamber RP45S	GJL-250 / 0.6025
7	* Diaph. Chamber RP45I	CF8M / 1.4408
8	Spindle	AISI 304 / 1.4301
9	Regulating spring	SPRING STEEL
10	* Impulse line RP45S	COPPER
10	* Impulse line RP45I	AISI 316 / 1.4401
11	* Cond. vessel a) RP45S	S235JRG2 / 1.0038
11	* Cond. vessel a) RP45I	AISI 316 / 1.4401

* Available spare parts.
a) Not necessary when in operation with low temperature compressed air or water.

L IMITING CONDITIONS	RP4 5S	RP4 5S	RP45I	RP 45 ST	RP45 ST	RP 45 IT	RP45 SN*	RP 45 SN *	RP 45I N *
Body design conditions	150 #	300 #	30 0 #	150 #	300 #	300 #	150 #	300 #	300 #
Max. upstream pressure	13 bar	25 bar	25 b ar	13 bar	25 bar	25 bar	1 3 bar	25 bar	25 bar
Max. downstream pressure **	13 bar	13 bar	13 b ar	13 bar	13 bar	13 bar	1 3 bar	13 bar	13 bar
Min. downstream pressure	0,15 bar	0,15 bar	0,15 bar	0, 15 bar	0,15 bar	0,15 bar	0,15 bar	0,15 bar	0,1 5 bar
Max. operating temperature	200ºC	250ºC	250º C	200 ºC	200 ºC	200 ºC	80 ºC	80 ºC	80 ºC
Max. reducing ratio	25:1	25:1	25:1	25:1	25:1	25:1	1 0:1	10:1	10:1
Range ability	10:1	10:1	10:1	10:1	10:1	10:1	1 0:1	10:1	10:1
Max.cold hydraulic test	24 bar	25 bar	25 b ar	24 bar	25 bar	25 bar	2 4 bar	25 bar	25 bar
Max.hyd. factory valve body test	24 bar	60 bar	60 b ar	24 bar	60 bar	60 bar	2 4 bar	60 bar	60 bar

*Suffix N : - a maximum turndown ratio 10 :1 should be observed. Other soft materials on request.
** Others on reques t with bell ows or piston actuator

CE MARKING (PED - European Directive)		
ANSI 150	ANSI 300	Category
1/2" - 2" (DN15-50)	1" (DN25)	SEP - art. 3, paragraph3
3"-4" (DN80-100)	11/2"-4" (DN40-100)	1 (CE Marked)
Note: classification for gases - Group 2, for others see IMI		

SATURATED STEAM CAPACITY TABLE (Kg/h) (P2 < 0,58 P1)							
PRESSURE	VALVE SIZE						
INLET (bar)	1/2"	3/4"	1"	11/2"	2"	3"	4"
0,5	51	68	90	186	300	800	1250
0,75	63	84	112	230	360	1000	1550
1	75	100	133	280	430	1200	1850
1,5	100	133	175	360	590	1600	2500
2	126	170	230	450	730	2000	3050
2,5	150	200	260	550	880	2400	3600
3	175	240	310	640	1010	2700	4300
4	220	290	390	800	1300	3400	5400
5	260	350	480	1000	1600	4200	6500
6	330	440	580	1220	1930	5100	8000
7	400	520	700	1430	2300	6100	9500
8	450	600	800	1670	2700	7100	11000
9	500	670	880	1800	2900	7800	12000
10	560	750	980	2000	3200	8500	13500
12	680	900	1180	2500	4000	10500	16300
14	800	1050	1400	2900	4700	12600	19000
16	920	1230	1630	3400	5500	14600	22000
18	1040	1400	1860	3800	6200	16600	25000
20	1170	1540	2100	4200	7000	18600	28000
22	1330	1780	2350	4900	7800	21000	32000
24	1500	2000	2600	5400	8700	23500	36000
25	1600	2150	2800	5700	9200	25500	38000

DIMENSIONS (mm)						
VALVE				ACTUATOR		
SIZE	*A* ANSI 300*	*B*	*WGT. Kgs*	*TYPE*	*C*	*WGT. Kgs*
1/2"	190	440	12,7	**A1**	172	4,3
3/4"	194	440	12,7	**A11**	172	4,3
1"	197	440	13,7	**A2**	220	7,3
11/2"	235	445	17,7	**A21**	220	7,3
2"	267	540	25,7	**A3**	282	11,3
3"	317	610	36,7	**A4**	340	16,3
4"	368	650	53,7			

* ANSI 150 is drilled with the same lenght.

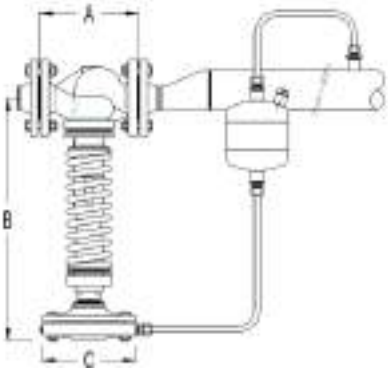

ACTUATOR AND SPRING SELECTION TABLE										
DN	Kvs m3/h	Cv (US)	ACTUATOR							
				A - 4	A - 4	A - 3	A - 2	A - 21	A - 1	A - 11
1/2"	4,8	5,6	Outlet (bar)	0,15 - 0,49	0,5 - 0,99	1,0 - 1,6	1,7 - 3,8	3,9 - 5,5	5,6 - 8,2	8,3 - 13
			Spring Nº.	66	60	60	60	60	60	60
3/4"	6,9	8	Outlet (bar)	0,15 - 0,49	0,5 - 0,99	1,0 - 1,6	1,7 - 3,8	3,9 - 5,5	5,6 - 8,2	8,3 - 13
			Spring Nº.	66	60	60	60	60	60	60
1"	9,1	10,6	Outlet (bar)	0,15 - 0,49	0,5 - 0,99	1,0 - 1,6	1,7 - 3,8	3,9 - 5,5	5,6 - 8,2	8,3 - 13
			Spring Nº.	66	60	60	60	60	60	60
11/2"	14,4	16,8	Outlet (bar)	0,15 - 0,49	0,5 - 0,99	1,0 - 1,6	1,7 - 3,8	3,9 - 5,5	5,6 - 8,2	8,3 - 13
			Spring Nº.	66	60	60	60	60	60	60
2"	26,5	31	Outlet (bar)	0,15 - 0,49	0,5 - 0,99	1,0 - 1,9	2 - 4,2	4,3 - 6,9	7 - 8,5	8,6 - 13
			Spring Nº.	67	61	61	61	61	64	64
3"	79,5	93	Outlet (bar)	0,15 - 0,45	0,46 - 0,99	1,0 - 1,9	2 - 5	5,1 - 8,9	9 - 13	/
			Spring Nº.	68	62	62	62	62	65	/
4"	129,5	151,5	Outlet (bar)	0,15 - 0,45	0,46 - 0,99	1,0 - 1,9	2 - 6,0	6,1 - 13	/	/
			Spring Nº.	69	63	63	63	63	/	/

5.41	PRESSURE REDUCING VALVE

VALVOIND Srl **Via Pascoli, 5 - 24060 Bagnatica (Bergamo) Tel. 035.681919-Fax. 035.684461**

Valvoind
valvole industriali

RP45

PRESSURE REDUCING VALVE

(EN)

PN16 – PN40

Da Ø 1/2" a Ø 6"
da DN 15 a DN150

- **OPTIONS**
  Soft sealing for steam. Nitrile rubber soft seated version for air and gas applications where tight shut-off is required. Low-noise flow divider
- **USE**
  Steam, compressed air and other gases and liquids compatible with the construction.
- **MODELS**
  RP45G and RP45GT or N – PN16 SG iron
  RP45S and RP45ST or N – PN16 Cast steel
  RP45S and RP45ST or N – PN40 Cast steel
  RP45I and RP45IT or N – Stainless Steel
  (All wetted parts free of ferrous metal or in St.Steel.).
  Suffix T : Soft seated with PTFE/GR
  Suffix N : soft seated with nitrile rubber
- **CONNECTIONS**
  RP45G Flanged EN 1092-2 PN16
  RP45S or I Flanged EN 1092-1 PN16 - PN40
- **INSTALLATION**
  Horizontal installation. An "Y" strainer, steam separator and steam trap should be provided upstream the valve. See IMI, installation and maintenance instructions.

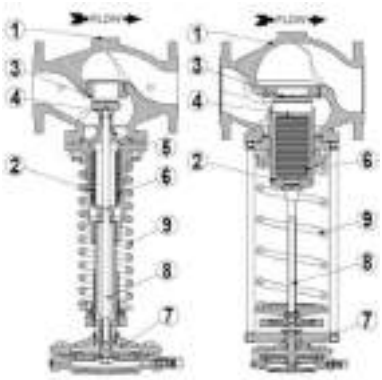

MATERIALS		
POS.	**DESIGNATION**	**MATERIAL**
1	Valve body RP45G	GJS-400-15 / 0.704 0
1	Valve body RP45S	A216WCB / 1.0619
1	Valve body RP45I	CF8M / 1.4408
2	Piston body RP45G and S	GJS-400-15 / 0.704 0
2	Piston body RP45I	GJS-400-15 / 0.7040 Nickel plated
3	Valve se at	HARDENED ST.STE EL
4	* Valve disc	HARDENED ST.STE EL
4	* S oft valve disc	AISI304/1.4301 ;NBR
5	Guide	Bronze B62 / ASTM B148-97
6	* Bellows	AISI 316 Ti / 1.4571
7	* Diaph.chamber RP45G	GJL-250 / 0.6025
7	* Diaph.chamber RP45S	A216WCB / 1.0619
7	* Diaph. Chamber RP45I	CF8M / 1.4408
8	* Spindle	AISI 304 / 1.4301
9	* Regulating spring	SPRING STEEL

* Available spare parts.

LIMITING CONDITIONS	RP 45 G RP4 5S	RP4 5S	RP45I	RP45GT RP 45 ST	RP45 ST	RP 45 IT	RP4 5G N* RP45 SN*	RP 45 SN *	RP 45I N *
Body design conditions	PN16	PN 40	PN 40	PN16	PN4 0	PN 40	PN 16	PN 40	PN 40
Max. upstream pressure	13 bar	25 bar	25 b ar	13 bar	25 bar	25 bar	1 3 bar	25 bar	25 bar
Max. downstream DN15/100	13 bar	18 bar	18 b ar	13 bar	18 bar	13 bar	1 3 bar	18 bar	18 bar
Max. downstream DN125/150	12 bar	16,5 bar	16,5 bar	12 bar	16,5 bar	16, 5 bar	1 2 bar	16,5 bar	16,5 bar
Min. downstream pressure	0,15 bar	0,15 bar	0,15 bar	0, 15 bar	0,15 bar	0,15 bar	0,15 bar	0,15 bar	0,1 5 bar
Max. operating temperature	200ºC	250ºC	250º C	200 ºC	200 ºC	200 ºC	80 ºC	80 ºC	80 ºC
Max. reducing ratio	25:1	25:1	25:1	25:1	25:1	25:1	1 0:1	10:1	10:1
Range ability	10:1	10:1	10:1	10:1	10:1	10:1	1 0:1	10:1	10:1
Max.cold hydraulic test	24 bar	25 bar	25 b ar	24 bar	25 bar	25 bar	2 4 bar	25 bar	25 bar
Max.hyd. factory valve body test	24 bar	60 bar	60 b ar	24 bar	60 bar	60 bar	2 4 bar	60 bar	60 bar

*Suffix N : - a maximum turndown ratio 10 :1 should be observed. Other soft materials on request.

CE MARKING (PED - European Directive)		
PN 16	**PN 40**	**Category**
DN15 to DN50	DN15 to DN32	SEP - art. 3, paragraph3
DN65 to DN150	DN40 to DN100	1 (CE Marked)
/	DN125 to DN150	2 (CE Marked)

SATURATED STEAM CAPACITY TABLE (Kg/h) (P2 < 0,58 P1)											
INLET	**VALVE SIZE**										
barg	**DN15**	**DN20**	**DN25**	**DN32**	**DN40**	**DN50**	**DN65**	**DN80**	**DN100**	**DN125**	**DN150**
0,5	51	68	90	118	186	300	460	800	1250	1500	1800
0,8	63	84	112	146	230	360	580	1000	1550	1750	2350
1,0	75	100	133	175	280	430	700	1200	1850	2250	3200
1,5	100	133	175	240	360	590	910	1600	2500	3000	4000
2,0	126	170	230	290	450	730	1160	2000	3050	3500	4700
2,5	150	200	260	350	550	880	1390	2400	3600	4500	6500
3,0	175	240	310	400	640	1010	1600	2700	4300	5500	8500
4,0	220	290	390	510	800	1300	2000	3400	5400	7000	10000
5,0	260	350	480	620	1000	1600	2500	4200	6500	8000	12000
6,0	330	440	580	760	1220	1930	3000	5100	8000	9500	14000
7,0	400	520	700	910	1430	2300	3600	6100	9500	11500	16000
8,0	450	600	800	1040	1670	2700	4100	7100	11000	13000	18000
9,0	500	670	880	1180	1800	2900	4600	7800	12000	15000	20000
10,0	560	750	980	1300	2000	3200	5100	8500	13500	17000	22000
12,0	680	900	1180	1540	2500	4000	6100	10500	16300	20000	25000
14,0	800	1050	1400	1850	2900	4700	7200	12600	19000	23000	29000
16,0	920	1230	1630	2150	3400	5500	8300	14600	22000	26000	33000
18,0	1040	1400	1860	2450	3800	6200	9500	16600	25000	30000	38000
20,0	1170	1540	2100	2700	4200	7000	10800	18600	28000	33000	42000
22,0	1330	1780	2350	3050	4900	7800	12200	21000	32000	36000	45000
24,0	1500	2000	2600	3400	5400	8700	13700	23500	36000	40000	48000
25,0	1600	2150	2800	3600	5700	9200	14500	25500	38000	42000	50000

DIMENSIONS (mm)						
VALVE				**ACTUATOR**		
SIZE DN	**A**	**B**	**WGT. Kgs**	**TYPE**	**C**	**WGT. Kgs**
15	130	440	12,7	A1	172	4,3
20	150	440	12,7	A1S	172	4,3
25	160	440	13,7	A10S	172	4,3
32	180	445	15,7	A11	172	4,3
40	200	445	17,7	A12S	172	4,3
50	230	540	25,7	A2	220	7,3
65	290	540	29,7	A21	220	7,3
80	310	610	36,7	A3	282	11,3
100	350	650	53,7	A4	340	16,3
125	400	780	101,4	B1	172	4,4
150	480	790	134,5	B2	220	7,4
				B21	220	7,4
				B3	283	11,6
				B4	340	18,6
				C11S	145	2,3

ACTUATOR AND SPRING SELECTION TABLE

DN	Kvs m3/h	ACTUATOR	A - 4	A - 4	A - 3	A - 2	A - 21	A - 1	A1S	A - 11	A12S	A-10S	B - 4	B - 3	B - 2	B - 21	B -1	C-11S
15	4,8	Outlet (bar)	0,15 - 0,49	0,5 - 0,99	1,0 - 1,6	1,7 - 3,8	3,9 - 5,5	5,6 - 8,2	/	8,3-13	10 - 18	/	/	/	/	/	/	/
		Spring Nº.	66	60	60	60	60	60	/	60	60.1	/	/	/	/	/	/	/
20	6,9	Outlet (bar)	0,15 - 0,49	0,5 - 0,99	1,0 - 1,6	1,7 - 3,8	3,9 - 5,5	5,6 - 8,2	/	8,3-13	10 - 18	/	/	/	/	/	/	/
		Spring Nº.	66	60	60	60	60	60	/	60	60.1	/	/	/	/	/	/	/
25	9,1	Outlet (bar)	0,15 - 0,49	0,5 - 0,99	1,0 - 1,6	1,7 - 3,8	3,9 - 5,5	5,6 - 8,2	/	8,3-13	10 - 18	/	/	/	/	/	/	/
		Spring Nº.	66	60	60	60	60	60	/	60	60.1	/	/	/	/	/	/	/
32	11,8	Outlet (bar)	0,15 - 0,49	0,5 - 0,99	1,0 - 1,6	1,7 - 3,8	3,9 - 5,5	5,6 - 8,2	/	8,3-13	10 - 18	/	/	/	/	/	/	/
		Spring Nº.	66	60	60	60	60	60	/	60	60.1	/	/	/	/	/	/	/
40	14,4	Outlet (bar)	0,15 - 0,49	0,5 - 0,99	1,0 - 1,6	1,7 - 3,8	3,9 - 5,5	5,6 - 8,2	/	8,3-13	10 - 18	/	/	/	/	/	/	/
		Spring Nº.	66	60	60	60	60	60	/	60	60.1	/	/	/	/	/	/	/
50	26,5	Outlet (bar)	0,15 - 0,49	0,5 - 0,99	1,0 - 1,9	2 - 4,2	4,3 - 6,9	7 - 8,5	/	8,6-13	/	10 - 18	/	/	/	/	/	/
		Spring Nº.	67	61	61	61	61	64	/	64	/	61	/	/	/	/	/	/
65	51,5	Outlet (bar)	0,15 - 0,49	0,5 - 0,99	1,0 - 1,9	2 - 4,2	4,3 - 6,9	7 - 8,5	/	8,6-13	/	10 - 18	/	/	/	/	/	/
		Spring Nº.	67	61	61	61	61	64	/	64	/	61	/	/	/	/	/	/
80	79,5	Outlet (bar)	0,15 - 0,45	0,46 - 0,99	1,0 - 1,9	2 - 5	5,1 - 8,9	9 - 13	11 - 18	/	/	/	/	/	/	/	/	/
		Spring Nº.	68	62	62	62	62	65	62	/	/	/	/	/	/	/	/	/
100	130	Outlet (bar)	0,15 - 0,45	0,46 - 0,99	1,0 - 1,9	2 - 6,0	6,1 - 13	/	11 - 18	/	/	/	/	/	/	/	/	/
		Spring Nº.	69	63	63	63	63	/	63	/	/	/	/	/	/	/	/	/
125	150	Outlet (bar)	/	/	/	/	/	/	/	/	/	/	0,5-1,5	1,1-2,5	1,5-5,5	4 - 8,5	6 - 12	8 - 16,5
		Spring Nº.	/	/	/	/	/	/	/	/	/	/	70	70	70	70	70	70
150	204	Outlet (bar)	/	/	/	/	/	/	/	/	/	/	0,5-1,5	1,1-2,5	1,5-5,5	4 - 8,5	6 - 12	8 - 16,5
		Spring Nº.	/	/	/	/	/	/	/	/	/	/	70	70	70	70	70	70

Actuator reference without suffix in cast iron, suffix S in cast steel, suffix SS in stain steel.

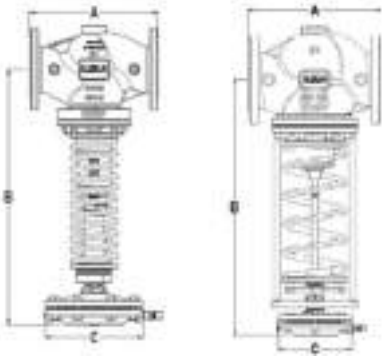

5.42	PRESSURE REDUCING VALVE

VALVOIND Srl **Via Pascoli, 5 - 24060 Bagnatica (Bergamo) Tel. 035.681919-Fax. 035.684461**

Valvoind
valvole industriali

RP45

PRESSURE REDUCING VALVE (Threaded)

PN16 – PN40

Da Ø 1/2" a Ø 1"
da DN 15 a DN 25

- **OPTIONS**
  Soft sealing for steam. Nitrile rubber soft seated version for air and gas applications where tight shut-off is required. Low-noise flow divider
- **USE**
  Steam, compressed air and other gases and liquids compatible with the construction.
- **MODELS**
  RP45S and RP45ST or N – PN40 Cast steel
  RP45I and RP45IT or N – Stainless Steel (All wetted parts free of ferrous metal or in St.Steel.).
  Suffix T : Soft seated with PTFE/GR
  Suffix N : soft seated with nitrile rubber
- **CONNECTIONS**
  Female screwed BSP or NPT
- **INSTALLATION**
  Horizontal installation. An "Y" strainer, steam separator and steam trap should be provided upstream the valve. See IMI, installation and maintenance instructions.

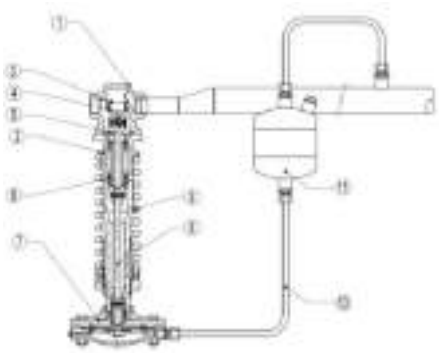

MATERIALS		
POS.	***DESIGNATION***	***MATERIAL***
1	Valve body RP45S	A 216 WCB / 1.0619
1	Valve body RP45I	CF8M / 1.4408
2	Piston body RP45S	GJS-400-15 / 0.7040
2	Piston body RP45I	GJS-400-15 / 0.7040 Nickel plated
3	Valve seat	HARDENED ST.STEEL
4	* Valve disc	HARDENED ST.STEEL
4	* Soft valve disc	AISI304/1.4301 ;NBR (PTFE/GR,etc)
5	Guide	AISI 304 / 1.4301
6	* Bellows	AISI 316 Ti / 1.4571
7	* Diaph.chamber RP45S	GJL-250 / 0.6025
7	* Diaph. Chamber RP45I	CF8M / 1.4408
8	Spindle	AISI 304 / 1.4301
9	Regulating spring	SPRING STEEL
10	* Impulse line RP45S	COPPER
10	* Impulse line RP45I	AISI 316 / 1.4401
11	* Cond. vessel a) RP45S	S235JRG2 / 1.0038
11	* Cond. vessel a) RP45I	AISI 316 / 1.4401

* Available spare parts.
a) Not necessary when in operation with low temperature compressed air or water.

LIMITING CONDITIONS						
	RP 45 S	RP 45I	RP45ST	RP 45 IT	RP4 5S N *	RP4 5IN *
Body design conditions	PN 40	PN40	PN4 0	PN 40	PN40	PN40
Max. upstream pressure	25 b ar	25 bar	25 bar	25 bar	25 bar	25 bar
Max. downstream pressure	13 b ar	13 bar	13 bar	13 bar	13 bar	13 bar
Min. downstream pressure	0,15 bar	0, 15 bar	0,15 bar	0, 15 bar	0,15 b ar	0,15 bar
Max. operating temperature	250ºC	250ºC	200 ºC	200 ºC	80 ºC	80 ºC
Max. reducing ratio	25:1	25: 1	25:1	25:1	10:1	10: 1
Range ability	10:1	10: 1	10:1	10:1	10:1	10: 1
Max. cold hydraulic test	25 b ar	25 bar	25 bar	25 bar	25 bar	25 bar
Max. hyd. factory valve body test	60 b ar	60 bar	60 bar	60 bar	60 bar	60 bar

*Suffix N : - a maximum turndown ratio 10 :1 should be observed. Other soft materials on request.
** Others on request with bellows or piston actuator

CE MARKING (PED - European Directive)		
PN 16	PN 40	Category
DN1/2" to DN 1"	DN1/2" to DN 1"	SEP - art. 3, paragraph3

SATURATED STEAM CAPACITY TABLE (Kg/h) (P2 < 0,58 P1)			
INLET barg	**VALVE SIZE**		
	DN 1/2"	**DN 3/4"**	**DN 1"**
0,5	51	68	90
0,75	63	84	112
1	75	100	133
1,5	100	133	175
2	126	170	230
2,5	150	200	260
3	175	240	310
4	220	290	390
5	260	350	480
6	330	440	580
7	400	520	700
8	450	600	800
9	500	670	880
10	560	750	980
12	680	900	1180
14	800	1050	1400
16	920	1230	1630
18	1040	1400	1860
20	1170	1540	2100
22	1330	1780	2350
24	1500	2000	2600
25	1600	2150	2800

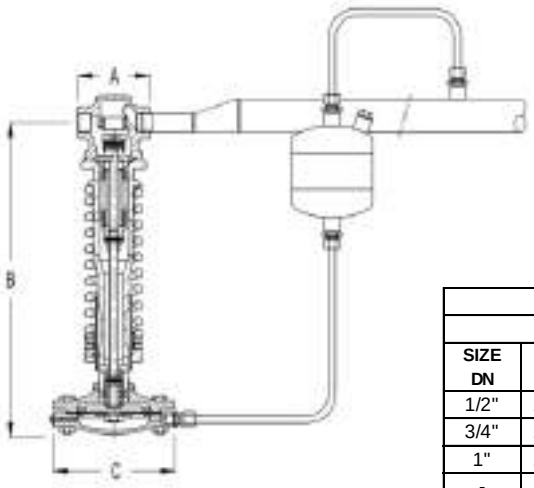

DIMENSIONS (mm)						
VALVE				ACTUATOR		
SIZE DN	A	B	WGT. Kgs	TYPE	C	WGT. Kgs
1/2"	100	440	11,2	**A1**	172	4,3
3/4"	100	440	11,5	**A11**	172	4,3
1"	100	440	12,1	**A2**	220	7,3
-	-	-	-	**A21**	220	7,3
-	-	-	-	**A3**	282	11,3
-	-	-	-	**A4**	340	16,3

ACTUATOR AND SPRING SELECTION TABLE									
VALVE SIZE DN	**Kvs m3/h**	**ACTUATOR**							
			A - 4	**A - 4**	**A - 3**	**A - 2**	**A - 21**	**A - 1**	**A - 11**
1/2"	**4,8**	**Out.(bar)**	0,15-0,49	0,5-0,99	1,0-1,6	1,7-3,8	3,9-5,5	5,6-8,2	8,3-13
		Spring Nº.	66	60	60	60	60	60	60
3/4"	**6,9**	**Out.(bar)**	0,15-0,49	0,5-0,99	1,0-1,6	1,7-3,8	3,9-5,5	5,6-8,2	8,3-13
		Spring Nº.	66	60	60	60	60	60	60
1"	**9,1**	**Out.(bar)**	0,15-0,49	0,5-0,99	1,0-1,6	1,7-3,8	3,9-5,5	5,6-8,2	8,3-13
		Spring Nº.	66	60	60	60	60	60	60

5.43	PRESSURE REDUCING VALVE

VALVOIND Srl **Via Pascoli, 5 - 24060 Bagnatica (Bergamo) Tel. 035.681919-Fax. 035.684461**

Valvoind
valvole industriali

RP45

PRESSURE REDUCING VALVE
(ANSI - EN - Threaded)

ANSI 150-300

PN16 – PN40

Correction factors:

The given capacities apply to the pressure reducing valves at **critical pressure drop** (downstream pressure in barg about 58% of the upstream pressure barg or lower). In case of **non-critical pressure drop** a correction factor must be used as follows: No correction factor should be used for smaller pressure ratios than 0.7.

PRESSURE RATIO * P2 / P1	CORRECTION FACTOR *f*
≥ 0,7	1,25
≥ 0,8	1,6
≥ 0,9	2,25
* Pressure ratio in bar abs (barg + 1)	

Superheated steam:

If superheated steam is to be reduced instead of saturated steam a correction factor has to be applied as well, the required mass flow must be multiplied by the following factor:

$\frac{Vh}{Vs}$, where Vh = specific volume of superheated steam and Vs = specific volume of saturated steam .

HOW TO SIZE (using table for steam)

Example (valve selection) : Saturated steam capacity: 300Kg/h; Upstream pressure: 3 bar; Downstream pressure required: 2bar.

Solution: First determine correction factor for pressure ratio: $\frac{2+1}{3+1} = 0.75 \rightarrow f = 1.25$

Then multiply the given capacity: 300 X 1.25 = 375*Kg h*

Go to 3 bar in the column "bar" of the capacity table. By following the horizontal line you can find out the values for selection of pressure reducing valve. Looking for an equal or higher value than 375 Kg/h. In this case it will be 400 Kg/h. Now, go to the top of the table and read off the nominal size: DN32

On the actuator and spring selection table, for downstream pressure of 2 bar we may see that the recommended actuator is type A-2, considering the valve supplied with spring Nr.60.

How to order: RP45G DN32 PN16 valve complete with spring Nr.60, type A-2 actuator, condensate vessel and copper tube impulse line.

HOW TO SIZE (using Kvs): please consult formulas on IS PV10.00 E or consult factory.

INSTALLATION RECOMMENDATIONS

RP45 is designed primarily for steam, compressed air and non inflammable gases. It has limited use for neutral liquids since the plug close in the same direction of the fluid flow, which can produce vibrations and water hammer when used at less than 20% of capacity. To avoid this, valve can be installed with the fluid direction against the plug under certain conditions. Please consult the factory.

At service conditions where the temperature is more than 100ºC it is necessary to protect the diaphragm against overheating by using a seal pot. Never size the valve according to the pipe diameter in which it has to be fitted but according to the required actual flow .Pipe sizing must also respect the maximum recommended flow velocities according to the medium.

INSTALLATION

Service conditions less than 100ºC: with gases the valve is ready to work. In case of liquids the actuator must be filled completely with liquid, so, the vent screw should be open till the water flow without bubbles. The valve can be installed with the diaphragm pointing upwards or downwards.

Service conditions more than 100ºC: Fill the seal pot using a funnel until the water emerges from the actuator vent without bubbles .Close the actuator vent screw and proceed filling the pot until the water reaches the top and close it with the plug. The valve is now ready to work. The valve must be installed with the diaphragm pointing downwards. Downstream pressure should be adjusted with the key. Compressing the spring, spring force increase and downstream pressure increase. Relaxing the spring, spring force decrease and downstream pressure decrease.The valve closes when the downstream pressure rises.

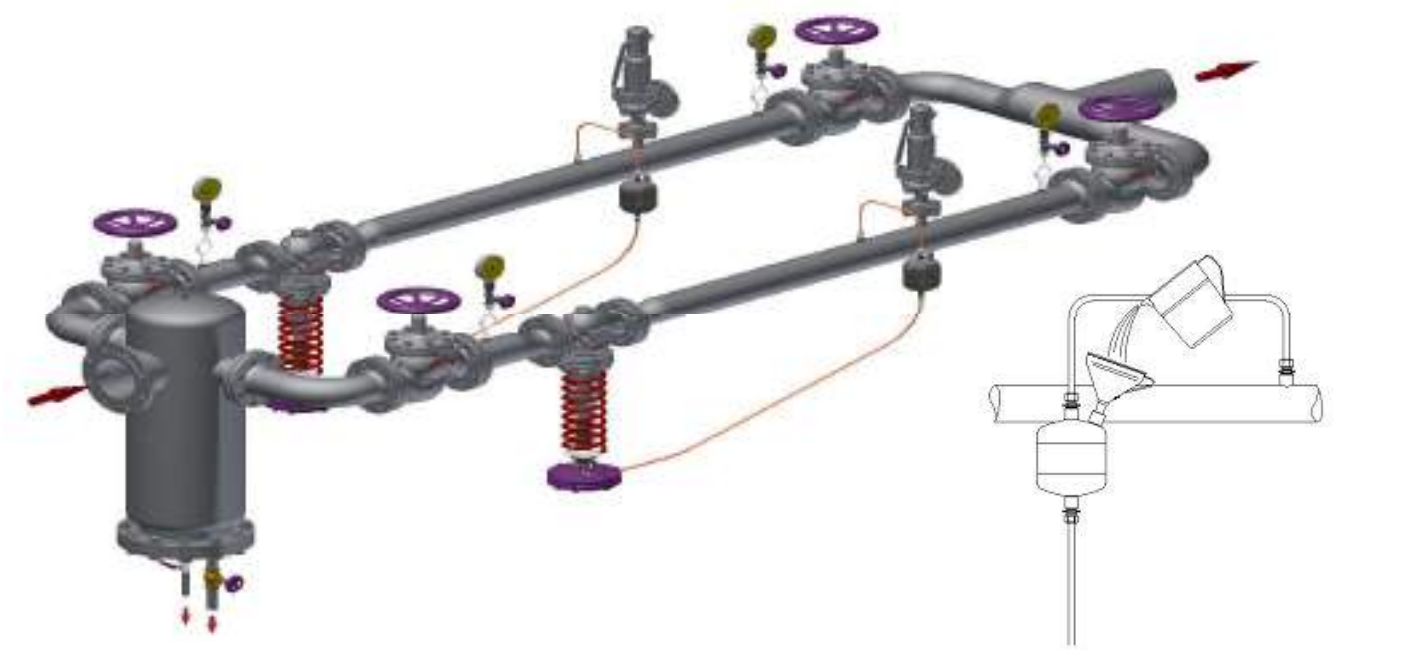

5.44	PRESSURE SUSTAINING VALVE

VALVOIND Srl **Via Pascoli, 5 - 24060 Bagnatica (Bergamo) Tel. 035.681919-Fax. 035.684461**

Valvoind
valvole industriali

PS 30SS

DIAPHRAGM SENSING PRESSURE SUSTAINING VALVE

PN16-PN40-PN63

Da Ø 1/2" a Ø " 2
da DN15 a DN50

- **OPTIONS**
  Different soft valves for water and gases.
  1/4" gauge connection on body.
  Regulating screw with top cap.
- **USE**
  Compressed air, water and other gases and liquids compatible with the construction.
- **MODELS**
  PS30/SS – Stainless steel
- **CONNECTIONS**
  Female screwed ISO7/1Rp(BS 21) or NPT.
  Flanged EN 1092-1 PN40-PN63.
  Special flanges upon request.
- **INSTALLATION**
  Horizontal installation.
  An "Y" strainer should be provided upstream the valve.
  See IMI, installation and maintenance instructions.

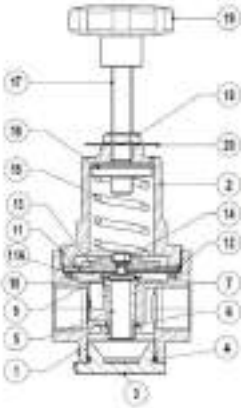

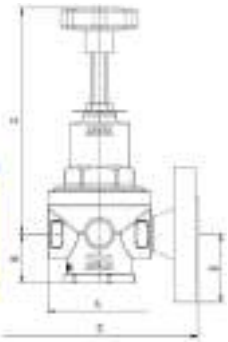

CAPACITIES						
Valve Size	15	20	25	32	40	50
KVs (m³/h)	2,1	2,4	6,8	7,2	12,7	15,7

LIMITING CONDITIONS	
Valve model	PS 30SS
Body design conditions	PN 63
Max upstream pressure	15 bar
Min upstream pressure	0,2 bar
Max design temperature *	80 °C

*Other on request.
Sustaining valves are not substitute of safety valves or vacuum relief valves

CE MARKING (PED-European Directive 97/23/EC)		
PN 16	PN 40-PN63	Category
DN 15 to 50	DN 15 to 32	SEP
	DN 40 - DN50	1 (CE Marked)

DIMENSIONS (mm) - Screwed				
SIZE DN	A	B	C	WGT. Kgs
1/2"-15	80	38	175	1,8
3/4"-20	80	38	175	1,8
1"-25	105	55	255	6,3
1 1/4"-32	120	68	280	7,8
1 1/2"-40	205	86	275	13
2"-50	201	80	274	18,3

(*) Different face to face dimensions on request.

MATERIALS		
POS.	DESIGNATION	MATERIAL
1	VALVE BODY (a)	CF8M / 1.4408 (AISI316 / 1.4401)
2	TOP COVER (a)	CF8M / 1.4408 (AISI316 / 1.4401)
3	SEAT COVER (a)	CF8M / 1.4408 (AISI316 / 1.4401)
4	* O-RING	NBR
5	VALVE SEAT	AISI316L / 1.4401
6	SEALING	NBR
7	* O-RING	NBR-GRON-PTFE etc
9	VALVE PLUG	AISI316 / 1.4401
10	* DIAPHRAGM	PTFE
11	* DIAPHRAGM	NBR
11A	O-RING	NBR-GRON-PTFE etc
12	GASKET	ALUMINIUM
13	SPRING PLATE	AISI304 / 1.4301
14	NUT	ST.STEEL A2-70
15	* ADJUSTMENT SPRING	SPRING STEEL
16	TOP SPRING PLATE	BRASS
17	ADJUSTMENT SCREW	AISI304 / 1.4301
18	LOCKNUT	ST.STEEL A2-70
19	HANDWHEEL	PLASTIC
20	SPRING IDENT. PLATE	ALUMINIUM

* Available spare parts
Remarks: All valves has a serial number. In case of non-standard valve the number must be supplied if spare parts are ordered.
a) Stainless execution on request (standard for sizes DN32-50)
b) Bronze execution on request

DIMENSIONS (mm) - Flanged								
EN 1092-1 Fig.PN16/PN40				EN 1092-1 Fig.PN63/PN100				
SIZE DN	D*	E	WGT. Kgs	D*	E PN63	E PN100	WGT. Kgs
15	130	47,5	3,3	210	52,5	52,5	4
20	150	52,5	5,6	230	70	70	6
25	160 (230)	57,5	6,3 (10,1)	230	70	70	12,8
32	180	70	11,4	260	77,5	77,5	16,4
40	200	75	16,3	290	85	85	20,1
50	**230	82,5	18,8	300	90	97,5	23,9

* Different lengths and ANSI flanges available on request.
** Only available with flat flanges EN 1092-1 Type01 A. Welding neck Type11 B flanges as option with 300mm minimum face to face dimensions.
(a) Alternative

PS 31SS

PISTON SENSING PRESSURE SUSTAINING VALVE

PN16-PN40-PN63

Da Ø 1/2" a Ø " 2
da DN15 a DN50

- **OPTIONS**
  Different soft valves for water and gases.
  Built-in strainer.
  1/4" gauge connection on body.
  Regulating screw with top cap.
- **USE**
  Compressed air, water and other gases and liquids compatible with the construction.
- **MODELS**
  PS31/SS – Stainless steel
- **CONNECTIONS**
  Female screwed ISO7/1Rp(BS 21) or NPT.
  Flanged EN 1092-1 PN40-PN63.
  Special flanges upon request.
- **INSTALLATION**
  Horizontal installation.
  An "Y" strainer should be provided upstream the valve.
  See IMI, installation and maintenance instructions.

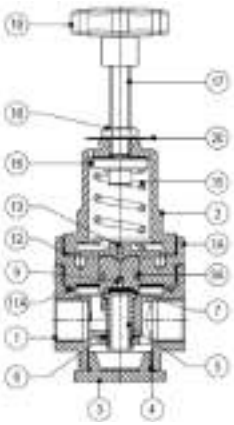

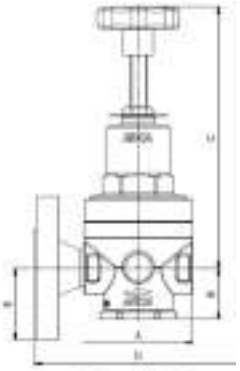

CAPACITIES						
Valve Size	15	20	25	32	40	50
KVs (m³/h)	3	3,5	7,5	8,2	14,4	15,4

LIMITING CONDITIONS	
Valve model	PS31SS
Body design conditions	PN 63
Max upstream pressure	10 bar
Min upstream pressure	0 bar
Max design temperature *	80 °C

*Other on request.
Sustaining valves are not substitute of safety valves or vacuum relief valves

CE MARKING (PED-European Directive 97/23/EC)		
PN 16	PN 40-PN63	Category
DN 15 to 50	DN 15 to 32	SEP
	DN 40 - DN50	1 (CE Marked)

DIMENSIONS (mm) - Screwed				
SIZE DN	A	B	C	WGT. Kgs
1/2"-15	80	38	175	2,8
3/4"-20	80	38	175	2,8
1"-25	105	55	255	6,8
1 1/4"-32	120	68	280	9,7
1 1/2"-40	205	86	285	14,8
2"-50	201	80	280	15,1

* Different face to face dimensions on request.

MATERIALS		
POS.	DESIGNATION	MATERIAL
1	VALVE BODY (a)	CF8M / 1.4408 (AISI316 / 1.4401)
1A	PISTON SLEEVE	AISI316 / 1.4401
2	TOP COVER (b)	CF8M / 1.4408 (AISI316 / 1.4401)
3	SEAT COVER (a)	CF8M / 1.4408 (AISI316 / 1.4401)
4	* O-RING	NBR
5	VALVE SEAT	AISI316L / 1.4401
6	SEALING	NBR
7	* O-RING	NBR-GRON-PTFE etc
9	PISTON	AISI316L / 1.4401
9A	* O-RING	NBR-GRON-PTFE etc
11A	O-RING	NBR-GRON-PTFE etc
12	GASKET	ALUMINIUM
13	SPRING PLATE	AISI304 / 1.4301
15	* ADJUSTMENT SPRING	SPRING STEEL
16	TOP SPRING PLATE	BRASS
17	ADJUSTMENT SCREW	AISI304 / 1.4301
18	LOCKNUT	ST.STEEL A2-70
19	HANDWHEEL	PLASTIC
20	SPRING IDENT. PLATE	ALUMINIUM

* Available spare parts
Remarks: All valves has a serial number. In case of non-standard valve the number must be supplied if spare parts are ordered.
a) Stainless execution on request (standard for sizes DN32-50)
b) Stainless execution on request

DIMENSIONS (mm) - Flanged							
EN 1092-1 Fig.PN16/PN40				EN 1092-1 Fig.PN63/PN100			
SIZE DN	D*	E	WGT. Kgs	D*	E PN63	E PN100	WGT. Kgs
15	130	47,5	4	210	52,5	52,5	4,9
20	150	52,5	4,7	230	70	70	5,9
25	160 (230)	57,5	5,7 (12,6)	230	70	70	13,1
32	180	70	13,5	260	77,5	77,5	16,5
40	200	75	18,1	290	85	85	22,1
50	**230	82,5	23,3	300	90	97,5	24,9

* Different lengths and ANSI flanges available on request.
** Only available with flat flanges EN 1092-1 Type01 A. Welding neck Type11 B flanges as option with 300mm minimum face to face dimensions.
(a) Alternative

5.45	PRESSURE SUSTAINING VALVE

VALVOIND Srl **Via Pascoli, 5 - 24060 Bagnatica (Bergamo) Tel. 035.681919-Fax. 035.684461**

Valvoind
valvole industriali

PS45

PRESSURE SUSTAINING VALVE (ANSI)

ANSI 150-300

Da Ø 1/2" a Ø 4"
da DN 15 a DN100

- **OPTIONS**
  Soft sealing for steam
  Nitrile rubber soft seated version for air and gas applications where tight shut-off is required.
- **USE**
  Steam, compressed air and other gases and liquids compatible with the construction.
- **MODELS**
  PS45S and PS45ST or N – Cast steel
  PS45I and PS45IT or N – Stainless Steel
  (All wetted parts free of non-ferrous metal or in St.Steel.).
  Suffix T : Soft seated with PTFE/GR
  Suffix N : soft seated with nitrile rubber
- **CONNECTIONS**
  Flanged ANSI B16.5 150# and 300#
- **INSTALLATION**
  Horizontal installation. An "Y" strainer, steam separator and steam trap should be provided upstream the valve. See IMI, installation and maintenance instructions. Sustaining valves are not substitute of safety valves or vacuum relief valves.

MATERIALS		
POS.	***DESIGNATION***	***MATERIAL***
1	Valve body PS45S	A 216 WCB / 1.0619
1	Valve body PS45I	CF8M / 1.4408
2	Piston body PS45S	GJS-400-15 / 0.7040
2	Piston body PS45I	GJS-400-15 / 0.7040 Nickel plated
3	Valve seat	HARDENED ST.STEEL
4	* Valve disc	HARDENED ST.STEEL
4	* Soft valve disc	AISI304/1.4301 ;NBR (PTFE/GR,etc)
5	Guide	AISI 304 / 1.4301
6	* Bellows	AISI 316 Ti / 1.4571
7	* Diaph.chamber PS45S	GJL-250 / 0.6025
7	* Diaph. Chamber PS45I	CF8M / 1.4408
8	Spindle	AISI 304 / 1.4301
9	Regulating spring	SPRING STEEL
10	* Impulse line PS45S	COPPER
10	* Impulse line PS45I	AISI 316 / 1.4401
11	* Cond. vessel a) PS45S	S235JRG2 / 1.0038
11	* Cond. vessel a) PS45I	AISI 316 / 1.4401

* Available spare parts.
a) Not necessary when in operation with low temperature compressed air or water.

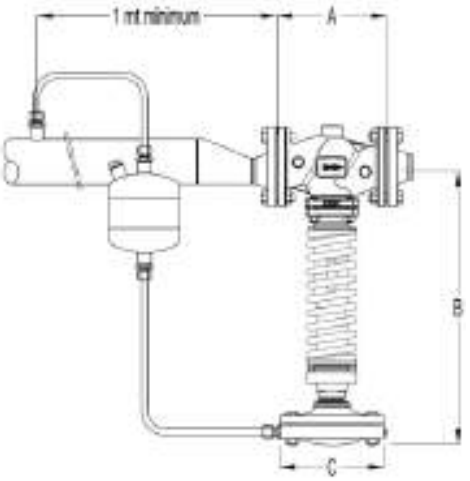

CE MARKING (PED - European Directive)		
ANSI 150	**ANSI 300**	**Category**
1/2" - 2" (DN15-50)	1" (DN25)	SEP - art. 3, paragraph3
3"-4" (DN80-100)	11/2"-4" (DN40-100)	1 (CE Marked)
Note: classification for gases - Group 2, for others see IMI		

DIMENSIONS (mm)						
VALVE				ACTUATOR		
SIZE	***A* ANSI 300***	***B***	***WGT. Kgs***	***TYPE***	***C***	***WGT. Kgs***
1/2"	190	440	12,7	**A1**	172	4,3
3/4"	194	440	12,7	**A11**	172	4,3
1"	197	440	13,7	**A2**	220	7,3
11/2"	235	445	17,7	**A21**	220	7,3
2"	267	540	25,7	**A3**	282	11,3
3"	317	610	36,7	**A4**	340	16,3
4"	368	650	53,7			

* ANSI 150 is drilled with the same lenght.

FLOWRATE CAPACITY Kvs m3/h								
VALVE SIZE								
1/2"	3/4"	1"	11/4"	11/2"	2"	21/2"	3"	4"
4,8	6,9	9,1	NA	14,4	26,5	NA	79,5	129,5

LIMITING CONDITIONS									
	PS 45 G P S4 5S	PS4 5S	P S45I	P S45GT PS 45S T	PS 45 ST	PS 45 IT	PS4 5G N* PS 45 SN*	PS 45 SN *	PS45I N *
Body design conditions	PN16	PN 40	PN 40	PN16	PN4 0	PN 40	PN 16	PN 40	PN 40
Max. upstream pressure **	13 bar	13 bar	13 b ar	13 bar	13 bar	13 bar	1 3 bar	13 bar	13 bar
Max. downstream pressure	13 bar	13 bar	13 b ar	13 bar	13 bar	13 bar	1 3 bar	13 bar	13 bar
Min. downstream pressure	0,15 bar	0,15 bar	0,15 bar	0, 15 bar	0,15 bar	0,15 bar	0,15 bar	0,15 bar	0,1 5 bar
Max. operating temperature	200ºC	250ºC	250º C	200 ºC	200 ºC	200 ºC	80 ºC	80 ºC	80 ºC
Max. reducing ratio	25:1	25:1	25:1	25:1	25:1	25:1	1 0:1	10:1	10:1
Range ability	10:1	10:1	10:1	10:1	10:1	10:1	1 0:1	10:1	10:1
Max. cold hydraulic test	24 bar	25 bar	25 b ar	24 bar	25 bar	25 bar	2 4 bar	25 bar	25 bar
Max. hyd. factory valve body test	24 bar	60 bar	60 b ar	24 bar	60 bar	60 bar	2 4 bar	60 bar	60 bar

*Suffix N : - a maximum turndown ratio 10 :1 should be observed. Other soft materials on request.
** Others on request with bellows or piston actuator

5.46	PRESSURE SUSTAINING VALVE

VALVOIND Srl **Via Pascoli, 5 - 24060 Bagnatica (Bergamo) Tel. 035.681919-Fax. 035.684461**

Valvoind
valvole industriali

PS45

PRESSURE SUSTAINING VALVE (EN)

PN 16 PN 40

Da Ø 1/2" a Ø 4"
da DN 15 a DN100

- **OPTIONS**
  Soft sealing for steam Nitrile rubber soft seated version for air and gas applications where tight shut-off is required.
- **USE**
  Steam, compressed air and other gases and liquids compatible with the construction.
- **MODELS**
  PS45G and PS45GT or N – PN16 SG iron
  PS45S and PS45ST or N – PN16 Cast steel
  PS45S and PS45ST or N – PN40 Cast steel
  PS45I and PS45IT or N – Stainless Steel
  (All wetted parts free of non-ferrous metal or in St.Steel.).
  Suffix T : Soft seated with PTFE/GR
  Suffix N : soft seated with nitrile rubber
- **CONNECTIONS**
  PS45G Flanged EN 1092-2 PN16
  PS45S or I Flanged EN 1092-1 PN16 – PN40
  ANSI B16.5 flanged connections on request. Horizontal installation.
- **INSTALLATION**
  Horizontal installation. An "Y" strainer, steam separator and steam trap should be provided upstream the valve. See IMI, installation and maintenance instructions. Sustaining valves are not substitute of safety valves or vacuum relief valves.

MATERIALS		
POS	*DESIGNATION*	*MATERIAL*
1	Valve body PS45G	GJS-400-15 / 0.704 0
1	Valve body PS45S	A216WCB / 1.0619
1	Valve body PS45I	CF8M / 1.4408
2	Piston body PS45G and S	GJS-400-15 / 0.704 0
2	Piston body PS45I	GJS-400-15 / 0.7040 Nickel plated
3	Valve seat	HARDENED ST.STE EL
4	* Valve disc	HARDENED ST.STE EL
4	* Soft valve disc	AISI304/1.4301 ;NBR (PTFE/GR,etc)
5	Guide	AISI 304 / 1.4301
6	* Bellows	AISI 316 Ti / 1.4571
7	* Diaph.chamber PS45G/S	GJL-250 / 0.6025
7	* Diaph. Chamber PS45I	CF8M / 1.4408
8	Spindle	AISI 304 / 1.4301
9	Regulating spring	SPRING STEEL
10	* Impulse line PS45G and S	COPPER
10	* Impulse line PS45I	AISI 316 / 1.4401
11	* Cond. vessel a) PS45S	S235JRG2 / 1.0038
11	* Cond. vessel a) PS45I	AISI 316 / 1.4401

* Available spare parts.
a) Not necessary when in operation with low tempe ra ture compressed air or water.

CE MARKING (PED - European Directive)		
PN 16	**PN 40**	**Category**
DN15 to DN50	DN15 to DN32	SEP - art. 3, paragraph3
DN65 to DN100	DN40 to DN100	1 (Marcato CE)

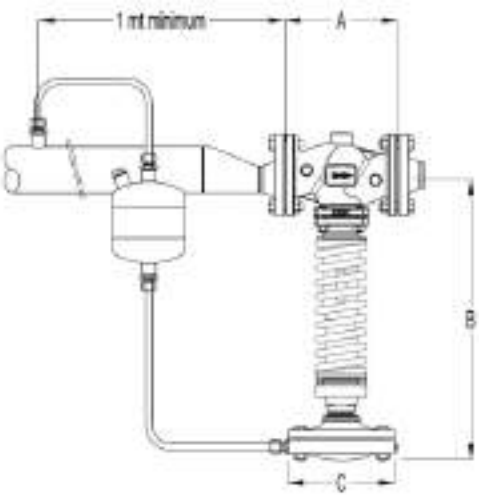

DIMENSIONS (mm)						
VALVE				ACTUATOR		
SIZE DN	*A*	*B*	*WGT. Kgs*	*TYPE*	*C*	*WGT. Kgs*
15	130	440	12,7	**A1**	172	4,3
20	150	440	12,7	**A11**	172	4,3
25	160	440	13,7	**A2**	220	7,3
32	180	445	15,7	**A21**	220	7,3
40	200	445	17,7	**A3**	282	11,3
50	230	540	25,7	**A4**	340	16,3
65	290	540	29,7			
80	310	610	36,7			
100	350	650	53,7			

FLOWRATE CAPACITY Kvs m3/h								
VALVE SIZE								
DN15	DN 20	DN 25	DN 32	DN 40	DN50	DN 65	DN 80	DN 100
4,8	6,9	9,1	11,8	14,4	26,5	51,5	79,5	129,5

LIMITING CONDITIONS									
	PS 45 G P S4 5S	PS4 5S	P S45I	P S45GT PS 45S T	PS 45 ST	PS 45 IT	PS4 5G N* PS 45 SN*	PS 45 SN *	PS45I N *
Body design conditions	PN16	PN 40	PN 40	PN16	PN4 0	PN 40	PN 16	PN 40	PN 40
Max. upstream pressure **	13 bar	13 bar	13 b ar	13 bar	13 bar	13 bar	1 3 bar	13 bar	13 bar
Max. downstream pressure	13 bar	13 bar	13 b ar	13 bar	13 bar	13 bar	1 3 bar	13 bar	13 bar
Min. downstream pressure	0,15 bar	0,15 bar	0,15 bar	0, 15 bar	0,15 bar	0,15 bar	0,15 bar	0,15 bar	0,1 5 bar
Max. operating temperature	200ºC	250ºC	250º C	200 ºC	200 ºC	200 ºC	80 ºC	80 ºC	80 ºC
Max. reducing ratio	25:1	25:1	25:1	25:1	25:1	25:1	1 0:1	10:1	10:1
Range ability	10:1	10:1	10:1	10:1	10:1	10:1	1 0:1	10:1	10:1
Max. cold hydraulic test	24 bar	25 bar	25 b ar	24 bar	25 bar	25 bar	2 4 bar	25 bar	25 bar
Max. hyd. factory valve body test	24 bar	60 bar	60 b ar	24 bar	60 bar	60 bar	2 4 bar	60 bar	60 bar

*Suffix N : - a maximum turndown ratio 10 :1 should be observed. Other soft materials on request.
** Others on request with bellows or piston actuator

5.47	PRESSURE SUSTAINING VALVE

VALVOIND Srl **Via Pascoli, 5 - 24060 Bagnatica (Bergamo) Tel. 035.681919-Fax. 035.684461**

Valvoind
valvole industriali

PS45	PRESSURE SUSTAINING VALVE (ANSI - EN)	ANSI 150-300 PN16 – PN40

ORDER REQUIREMENTS

For the optimum selection of valve and actuator it is recommended that valve spring and actuator selection is made by the factory or an authorized distributor. For the proper selection following data should be supplied:
-Type of fluid and temperature (not necessary in case of saturated steam)
-Maximum operating pressure
-Required opening pressure
-Flow rate (maximum and minimum)

How to order

PS45G DN32 PN16 valve complete with spring Nr.60, type A-2 actuator, condensate vessel and copper tube impulse line.

HOW TO SIZE (using Kvs): please consult formulas on IS PV10.00 E or consult factory.

INSTALLATION RECOMMENDATIONS

PS45 is designed primarily for steam, compressed air and non inflammable gases. It has limited use for neutral liquids which can produce vibrations and water-hammer. Please consult the factory.
At service conditions where the temperature is more than 100ºC it is necessary to protect the diaphragm against overheating by using a seal pot.
Never size the valve according to the pipe diameter in which it has to be fitted but according to the required actual flow .Pipe sizing must also respect the maximum recommended flow velocities according to the medium.

INSTALLATION

Service conditions less than 100ºC: with gases the valve is ready to work. In case of liquids the actuator must be filled completely with liquid, so, the vent screw (12) should be open till the water flow without bubbles.
The valve can be installed with the diaphragm pointing upwards or downwards.
Service conditions more than 100ºC : Fill the seal pot (11) using a funnel (14) until the water emerges from the actuator vent (12) without bubbles .Close the actuator vent screw (12) and proceed filling the pot until the water reaches the top and close it with the plug. The valve is now ready to work.
The valve must be installed with the diaphragm pointing downwards.
Upstream pressure should be adjusted with the key (13). Compressing the spring, spring force increase and upstream pressure aperture increase. Relaxing the spring, spring force decrease and upstream pressure aperture decrease.
The valve closes when the upstream pressure decreases.

Remarks:

PN ratings and materials according to the operating pressures.
* The balance pipe connection is recommended to enter upstream pipe at a minimum of 1 meter from valve.
Installation instructions are available (IMI-PS45) and typical assembling drawing.
Special assembling designs may be produced on request.

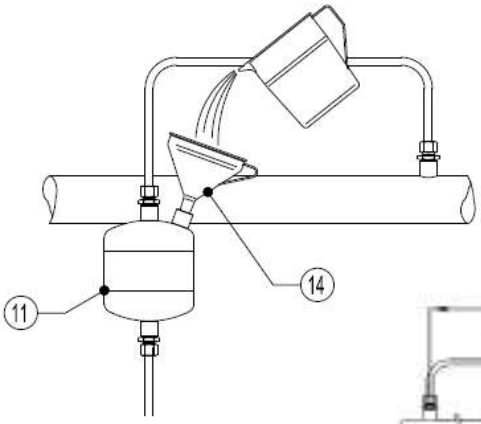

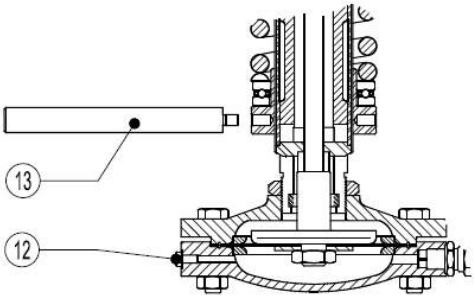

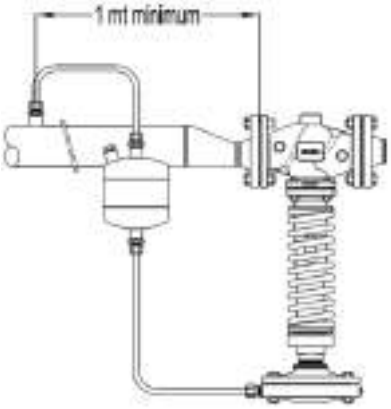

5.48	PRESSURE SUSTAINING VALVE

VALVOIND Srl **Via Pascoli, 5 - 24060 Bagnatica (Bergamo) Tel. 035.681919-Fax. 035.684461**

Valvoind
valvole industriali

PS 47
PS 47I

PILOT OPERATED PRESSURE SUSTAINING VALVES
(Steel and St. Steel)

PN40

Da Ø 1/2" a Ø 2"
Da DN15 a DN50

- **OPTIONS**
  Soft faced valve plug for gases and steam
  Special pressure top for low pressures
  Drain connection in bottom cover
  Stellited plug and seat
- **USE**
  Saturated steam, compressed air and other gases (Group 2) compatible with the construction (except oxygen).
- **MODELS**
  PS47 - standard model for steam
  PS47G -compressed air and gases
- **CONNECTIONS**
  Flanged EN 1092-1 PN40 or ANSI
  Threaded BSP, NPT, SW.
- **INSTALLATION**
  Horizontal installation.
  An "Y" strainer, steam separator and steam trap should be provided upstream the valve.

Fig. 1

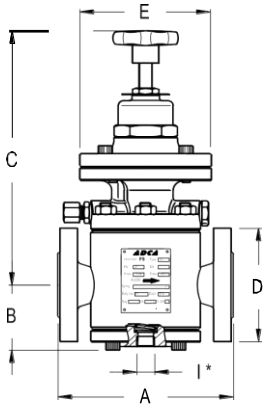

Fig. 2

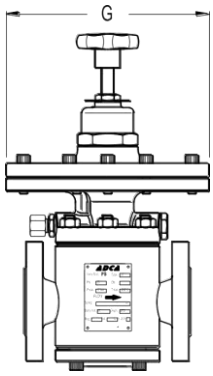

Fig.1 - Valve with standard diaphragm; Fig.2 - Valve with low pressure top.

Important: the PS47 valve can be supplied with internal orifice or external pipe for pilot valve upstream pressure signal supply.
* Drain connection (option) for steam trapping. This drain connection does not replace the separator but can be useful if for example the valve stops operation for large periods.

BODY LIMITING CONDITIONS	
FLANGED PN40	RELATED TEMP.
ALLOW. PRES.	
40 bar	120 °C
32 bar	239 °c
28 bar	300 °C
Maximum upstream pressure : 17 bar	
Minimum upstream pressure : 0,7 bar	
Min.w orking temperature: -10°C	

CE MARKING (PED - European Directive 97/23/EC)	
PN 40	Category
DN15 to DN32	SEP - art. 3, paragraph3
DN40 to DN50	1 (CE Marked)

PRESSURE RANGES IN bar				
SPRING COLOURS	*GREEN W /1 Membrana*	*BLUE W/ 1Membrana*	*RED W /2 Diaphragms*	*BLACK W /2 Diaphragms*
Red. Pressure	0,07 to 0,5 bar *	1,5 to 5,5 bar **	3,5 to 8,5 bar **	7 to 17 bar **
Red. Pressure	0,35 to 2 bar **	/	/	/
*With low pressure top; **Standard diaphragm.				

DIMENSIONS - VALVE BODY (mm)								
DN	*A EN1092-1 Flanges*	*B*	*C*	*D*	*E*	*G*	*I*	*WEIGHT Kgs*
15	150	56	275	95	120	195	3/8"	13
20	150	56	287	105	120	195	3/8"	13,5
25	160	56	287	115	120	195	3/8"	14
32	180	68	299	140	120	195	3/8"	18
40	200	75	307	150	130	195	3/8"	22
50	230	84	323	165	160	195	3/8"	31

PS47I

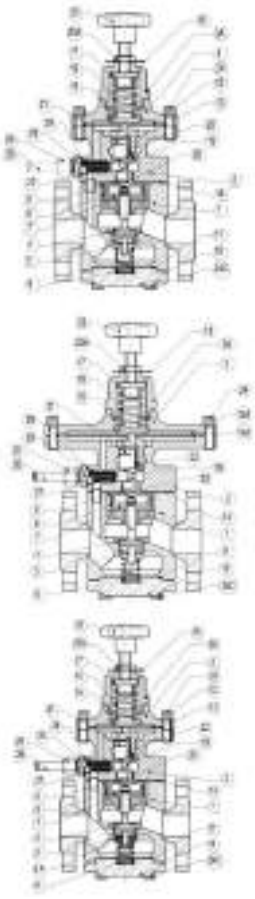

PS47

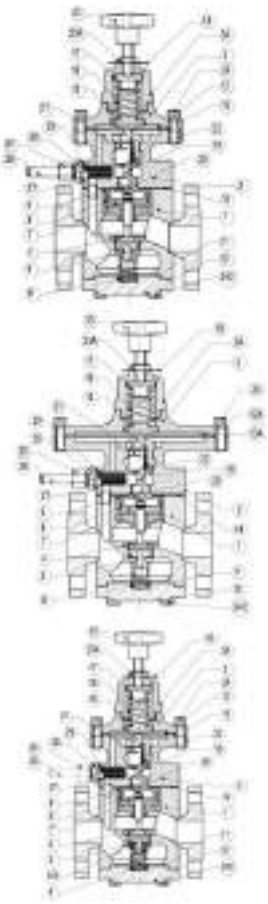

MATERIALS					
POS.			DESIGNATION	MATERIAL	
N.	PS47 *	PS47I *		PS47 - Steel Costruction	PS47I - Stainless Steel Costruction
1			VALVE BODY	S355J2G3 / 1.0570 P250GH / 1.0460	AISI316 / 1.4401
2			PILOT VALVE BODY	CF8 / 1.4308	CF8 / 1.4308
3			TOP COVER	CF8 / 1.4308	CF8 / 1.4308
3A			COVER SPRING	CF8 / 1.4308	CF8 / 1.4308
4	*	*	MAIN VALVE SEAT	AISI316 / 1.4401	AISI316 / 1.4401
5	*	*	MAIN VALVE	HARDENED ST. STEEL	HARDENED ST. STEEL
5A	*	*	MAIN VALVE (SOFT)	SS316W/PTFE/GR/RULON	SS317W/PTFE/GR/RULON
6	*	*	MAIN VALVE SPRING	AISI302 / 1.4300	AISI302 / 1.4300
7	*	*	PISTON	BRASS/BRONZE	ST.STEEL
8	*	*	PISTON RINGS	BRONZE/FKM/EPDM/NBR	BRONZE/FKM/EEPDM/NBR
9			PISTON LINER	AISI304L / 1.4306	AISI304L / 1.4306
10		*	BOTTOM COVER	S355J2G3 / 1.0570	AISI316 / 1.4401
11	*	*	BOTTOM COVER GASKET	ST.STEEL / GRAPHITE	ST.STEEL/GRAPHITE/PTFE
12	*	*	DIAPHRAGM	AISI301 / 1.4310	AISI301 / 1.4310
12A	*	*	LOW PRESSURE DIAPHRAGM	AISI301 / 1.4310	AISI301 / 1.4310
13	*	*	DIAPHRAGM GASKET	ST.STEEL / GRAPHITE	ST.STEEL / GRAPHITE
13A	*	*	DIAPHRAGM GASKET	ST.STEEL / GRAPHITE	ST.STEEL / GRAPHITE
14	*	*	PILOT VALVE GASKET	ST.STEEL / GRAPHITE	ST.STEEL / GRAPHITE
15			LOWER SPRING CARRIER	BRASS	BRASS/ST.STEEL
16	*	*	ADJUSTMENT SPRING	STEEL	ACCIAIO/ST.STEEL
17			TOP SPRING CARRIER	BRASS	BRASS
18			SPRING IDENT. PLATE	ALLUMINIUM	ALLUMINIUM / ST.STEEL
19	*	*	PILOT VALVE PLUG	AISI316 / 1.4401	ST.STEEL
19A	*	*	PILOT VALVE PLUG (SOFT)	PTFE/GR;RULON, ECC.	PTFE/GR/RULON/ECC.
20	*	*	PILOT VALVE SEAT	AISI316 / 1.4401	AISI316 / 1.4401
21	*	*	PILOT VALVE BODY	CF8 / 1.4308	CF8 / 1.4308
22	*	*	PILOT VALVE SPRING	AISI302 / 1.4300	AISI302 / 1.4300
23			HANDWHEEL	PLASTIC /ST.STEEL	PLASTIC / ST. STEEL
23A			LOCKNUT	AISI304 / 1.4301	AISI304 / 1.4301
24			BOLTS	STEEL 10.9	ST- STEEL A-4
24C			BOLTS	STEEL 10.9	ST- STEEL A-4
25			COMPRESSION FITTING	PLATED CARBON STEEL	ST.STEEL
26			BALANCE PIPE (optional)	COPPER	ST.STEEL
27	*	*	PILOT VALVE STRAINER	ST.STEEL	AISI304 / 1.4301
28			STRAINER NUT	AISI304 / 1.4301	AISI304 / 1.4301
29			GASKET	COPPER	COPPER/PTFE

* Available spare parts.
a) Not necessary when in operation with low temperature compressed air or water.

5.49	PRESSURE SUSTAINING VALVE

VALVOIND Srl **Via Pascoli, 5 - 24060 Bagnatica (Bergamo) Tel. 035.681919-Fax. 035.684461**

Valvoind
valvole industriali

PS 47 - STEAM CAPACITY TABLE (Kg/h)

INLET	OUTLET	SATURATED STEAM					
bar	bar	DN15	DN20	DN25	DN32	DN40	DN50
0,7	**0,35**	40	75	125	190	280	480
1	**0,40**	45	95	160	240	355	620
	0,60	40	83	140	210	308	535
2	**0,4 ÷ 1**	75	150	250	380	545	960
	1,20	65	138	230	345	515	900
	1,60	50	105	175	265	393	685
3	**0,4 ÷ 1,5**	100	200	335	510	750	1310
	2,00	85	170	290	450	660	1155
	2,20	80	165	277	416	613	1050
	2,60	60	127	203	315	467	818
4	**0,4 ÷ 2**	125	250	420	630	920	1580
	2,50	114	225	385	580	850	1465
	3,20	92	183	309	482	708	1205
	3,60	68	137	237	353	536	932
5	**0,4 ÷ 2**	150	310	512	755	1114	1895
	3,00	144	295	488	743	1095	1835
	4,00	115	225	373	578	846	1430
	4,20	105	213	343	525	770	1342
6	**0,4 ÷ 3**	175	355	602	919	1358	2298
	4,00	159	314	538	827	1217	2142
	5,00	119	250	411	637	941	1644
	5,20	109	217	360	568	839	1465
7	**0,4 ÷ 3,5**	197	410	670	1005	1540	2644
	5,00	178	358	587	908	1345	2306
	6,00	132	271	452	688	1027	1773
	6,20	122	251	416	635	934	1618
8	**0,4 ÷ 4**	225	471	778	1169	1759	3043
	5,00	221	339	730	1118	1659	2884
	6,00	192	385	639	976	1451	2513
	7,00	146	293	481	732	1085	1887
	7,20	137	274	453	692	1011	1782
9	**0,4 ÷ 5**	251	518	856	1325	1923	3358
	6,00	241	500	788	1222	1766	3095
	7,00	206	398	679	1068	1559	2676
	8,00	156	314	514	794	1142	2053
	8,20	145	292	483	741	1090	1888
10	**0,4 ÷ 5**	275	561	944	1468	2127	3718
	6,00	272	551	917	1419	2074	3619
	7,00	252	508	838	1268	1871	3249
	8,00	213	431	722	1118	1659	2831
	9,00	163	333	548	843	1244	2152
	9,20	150	298	493	756	1143	1929
12	**1 ÷ 6**	330	680	1124	1732	2541	4407
	8,00	311	629	1023	1575	2332	4034
	10,00	265	533	812	1271	1867	3202
	11,00	175	364	568	924	1350	2359
15	**1 ÷ 8**	408	839	1373	2138	3118	5403
	12,00	339	656	1068	1629	2441	4250
	14,00	199	401	662	1017	1503	2619
17	**1 ÷ 9**	425	863	1460	2178	3165	5343
	15,00	347	709	1190	1816	2694	4712
	16,00	207	416	717	1217	1608	2824

PS 47 - COMP. AIR CAPACITY TABLE (Nm3/h-0ºC-1,013bar)

INLET	OUTLET	COMPRESSED AIR					
bar	bar	DN15	DN20	DN25	DN32	DN40	DN50
0,7	**0,35**	15	31	50	70	111	191
1	**0,40**	16	33	51	79	113	194
	0,60	27	55	90	138	199	343
2	**0,4 ÷ 1**	60	122	201	307	444	763
	1,20	54	109	180	276	399	686
	1,60	45	91	150	230	333	572
3	**0,4 ÷ 1,5**	120	240	300	460	666	1150
	2,00	105	210	251	384	555	1050
	2,20	48	93	152	232	334	570
	2,60	45	61	101	154	223	384
4	**0,4 ÷ 2**	150	238	499	739	1089	1825
	2,50	135	208	449	568	978	1635
	3,20	119	177	398	492	867	1444
	3,60	60	124	202	154	444	763
5	**0,4 ÷ 2**	180	360	505	768	1110	1908
	3,00	165	330	556	691	997	1716
	4,00	151	298	404	613	885	1526
	4,20	136	285	383	582	840	1449
6	**0,4 ÷ 3**	210	468	696	1046	1523	2580
	4,00	195	437	646	969	1412	2389
	5,00	150	345	494	738	1079	1817
	5,20	135	315	443	664	968	1627
7	**0,4 ÷ 3,5**	240	480	804	1200	1740	2989
	5,00	210	421	701	1046	1524	2640
	6,00	150	301	499	756	1104	1829
	6,20	105	211	349	529	773	1280
8	**0,4 ÷ 4**	270	546	798	1353	1746	3411
	5,00	265	516	747	1276	1635	3220
	6,00	225	449	710	1125	1635	2762
	7,00	180	361	600	892	1296	2184
	7,20	156	312	540	768	1128	1978
9	**0,4 ÷ 5**	301	612	1011	1507	2244	3789
	6,00	270	553	910	1359	1980	3474
	7,00	240	492	816	1230	1798	2970
	8,00	180	360	598	903	1288	2247
	8,20	165	329	547	826	1176	2056
10	**0,4 ÷ 5**	330	659	1116	1692	2412	4173
	6,00	314	628	1065	1615	2301	3983
	7,00	288	599	1004	1503	2202	3810
	8,00	240	492	806	1212	1770	3022
	9,00	192	360	658	898	1350	2280
	9,20	181	342	628	852	1283	2165
12	**1 ÷ 6**	390	792	1300	1978	2844	4917
	8,00	360	732	1219	1827	2622	4497
	10,00	270	553	910	1359	1980	3474
	11,00	210	468	696	1046	1523	2580
15	**1 ÷ 8**	480	972	1602	2427	3564	6072
	12,00	375	762	1272	1923	2784	4692
	14,00	255	528	889	1332	1896	3398
17	**1 ÷ 9**	540	912	1819	2737	3984	6818
	15,00	315	708	1179	1764	2520	4418
	16,00	255	528	889	1332	1896	3398

Remarks: A pressure sustaining valve is normally sized on the minimum alow able pressure drop across the valve. A pressure sustaining valve is not a safety valve and should not be used for that purpose.